Part and Inventory Control Analysis Using Plan of Every Part Concept "A Case Study at Elba, Inc., USA"

Abdelhakim Abdelhadi
Industrial Engineering Department
King Khalid University
Abha, Saudi Arabia

Hamid Seifoddini
Industrial Engineering Department
University of Wisconsin-Milwaukee
Wisconsin, USA

Mohammed Almomani
Industrial Engineering Department
Jordan University of Science and Technology
Irbid, Jordan

Abstract

Plan for every part utilizes many Lean Manufacturing principals such as standardization, minimizing inventories, reducing paper work, removing human error, and utilizing visual factory. Because the nature of the business of the company under study is assembly, and each product contains over a hundred purchased components, it is important to have a plan for every part, PFEP,. The study shows the benefits of applying Lean Manufacturing using PFEP by creating a lean flow of purchased parts by developing "Supermarket" location for every part which leads to minimizing the inventory cost and increasing the wealth to the company.

Keywords
Lean Manufacturing, Six Sigma

1. Introduction
Elba, Inc. operates as a diversified industrial manufacturing company in the United States. It operates in two segments, Water and Technical Products. The Water segment manufactures and markets products and systems used in the movement, treatment, storage, and enjoyment of water. This segment also manufactures control valves, filtration components, tanks, pressure vessels, and specialty dispensing pumps for use in the residential, commercial, foodservice, recreation vehicles, marine, and aviation sectors. The Water segment distributes its products through wholesale distributors, retail distributors, original equipment manufacturers, and home centers. Elba Inc. has been actively using lean manufacturing concepts throughout their entire facility. They have effectively utilized 5s, single piece flow, visual factory, cellular manufacturing, TPM and are actively focusing on continuous improvement. They have used lean manufacturing not only on their shop floor, but also within their sales, clerical, and management departments. One area that that Elba management wanted to take a closer look at is their inventory information and part flow. Although this area has been looked at previously, they wanted to ensure that there is no more improvement that could occur.

2. Purpose
The Elba facility in Brookfield, Wisconsin, USA, was the focus of this study. This segment of the company manufactures water softener valves for both residential and commercial applications. The following are the main goals and direction of this study:

1. Apply the lean principle of continuous improvement to purchasing, supplier management, and inventory control.
2. Create a current state value stream map of part flow from the receiving dock to the work cell.
3. Create a value stream map of information flow from the work cell to the supplier
4. Identify waste and problem areas
5. Make recommendations for improvement
6. Examine the principles of Plan For Every Part (PFEP) and see where they apply
7. Create a future state diagram

3. Analysis

Gathering information about the company and the current supply management system was the first step in our analysis process. We started by mapping the current state.

Part Flow Analysis

- Parts are taken from the receiving dock and placed either in a warehouse location or are brought directly into the "active" storage area, or "flow racks".
- Floaters will retrieve the parts from the flow racks and bring them to the work cells
- Parts are then loaded into feed tubes or bins located on work benches within reach of an assembler.

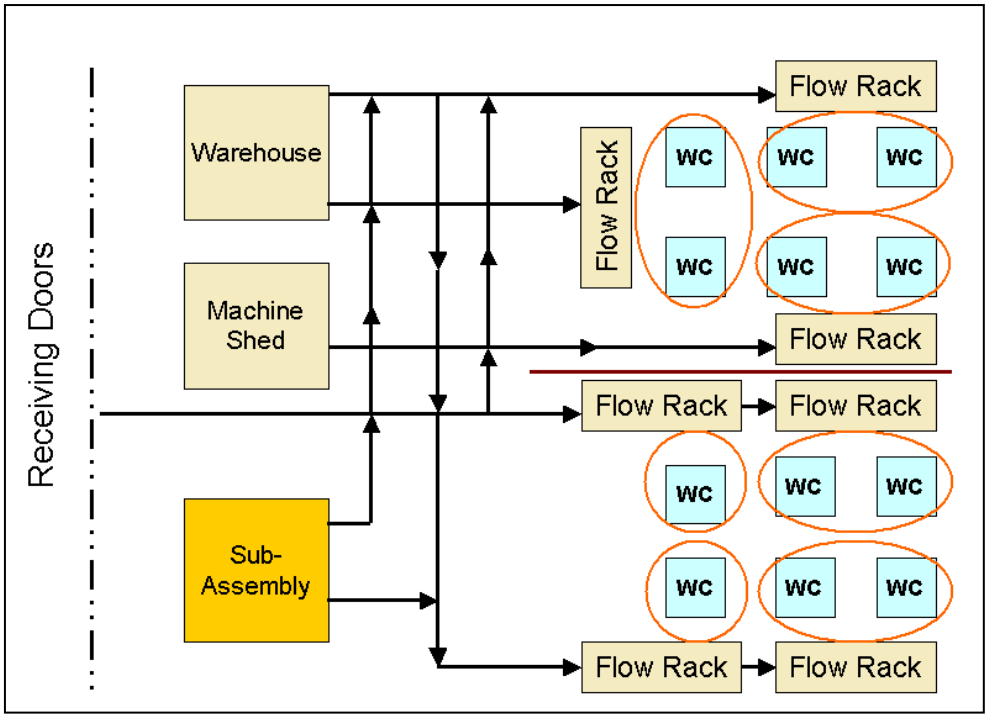

Figure 1: Part Flow Diagram – Current State

Identified Waste/Problems

- Starving – some cells periodically have to stop production because parts run out before floater can refill
- Excess inventory – When too many parts are purchased or when parts are purchased too soon there is not enough room for them on the flow racks so they have to be stored somewhere else causing double handling.
- Motion – Floaters have to walk back and forth to collect the parts they need for the work cells.
  - They periodically have a hard time finding the parts they need, thus having to search for long periods of time.

- Some parts can have as many as 6 locations for the same part.
- Setup - Floaters getting boxes from flow racks, filling feed tubes and returning boxes is very labor intensive.
- Too many inventory locations –
  - When parts that need to be kept in the warehouse are received the material handler puts them in any available location causing multiple warehouse locations.
  - Because each work cell or family of work cells have their own flow racks and because some parts are used in every work cell a part can have many flow rack locations.
  - Because of the multiple part locations FIFO is never used.

Inventory Information Flow Analysis:
The basic information flow starts with the floater scanning cards when boxes or bins are empty, this updates the available quantity count in the ERP system. Depending on what type of part is scanned more parts are delivered from the warehouse or another lot of parts are ordered from the supplier.

There are four major inventory replenishment systems; they are Vendor Managed, Supplier Kanban, Internal Kanban, and Purchased Components. The following describes each of the systems:

1. Vendor Managed Parts
Parts such as fasteners, hardware, o-rings and labels are stored in labeled bins in each work cell. They are brought directly to their locations in the assembly cell by the vendor. The vendor then bills Elba, based on usage, against a blanket P.O.

2. Supplier Kanban Parts
Parts such as larger machined parts are stored in Kanban bins in the work cell. When Elba empties a bin the bin is shipped back to the supplier. When the supplier has a predetermined amount of empty bins they ship a predetermined amount of filled bins to Elba. The supplier then bills Elba based on bins shipped against a blanket P.O.

3. Internal Kanban Parts
Parts that are machined in house and subassemblies that are made in house are stored in Kanban bins on flow racks or in the work cell. When the work cell empties a bin it is returned to the machine shop or sub assembly. When a predetermined amount of empty bins has accumulated the department will know it's time to run that job and deliver it to the work cell.

4. Purchased Components
There are three major purchased parts categories. They are:

a. Discreet Parts: Parts that corporate dictates to Elba to purchase from overseas suppliers. These are generally long lead time items purchased in large quantities for discounts. They have a large amount of safety stock.

b. Consignment Parts: Parts that have high inventory turns, usually a standard stocked part for the supplier or one that the supplier will stock for Elba. Consignment parts are reordered automatically by Elba's ERP system. When a floater empties a box they scan a card and the ERP keeps track of inventory. When the reorder point is reached the ERP faxes the supplier an order against a blanket P.O.

c. Hold for Release Parts: Parts that are manufactured for Elba like castings, machined parts and molded parts. Hold for release parts are reordered by Elba's buyers. When a floater empties a box they scan a card and the ERP keeps track of inventory. Periodically buyers will print out and examine a quantity on hand list and determine if a part needs to be purchased. If it does the buyer will send the supplier an order against a blanket P.O.

Identified Wastes/Problems

1. Too much inventory: Discreet Parts is the biggest violator of low inventory rules; Elba carries from 3 to 6 months' worth of inventory of these parts. Unfortunately it is a corporate mandate that we use these suppliers. There are other parts, however, whose order quantities are more than what can fit on the flow racks so they have to be warehoused.
2. Too much travel distance of parts and too many touches.
    - Many parts are handled by receiving, unpackaged, warehoused, moved to flow racks then moved to work cells.
    - When a floater loads the parts into the feed tubes they carry a box of parts to the work cell, fill the feed tube, then take the box back to the flow rack.
3. Elba has stock outs almost daily

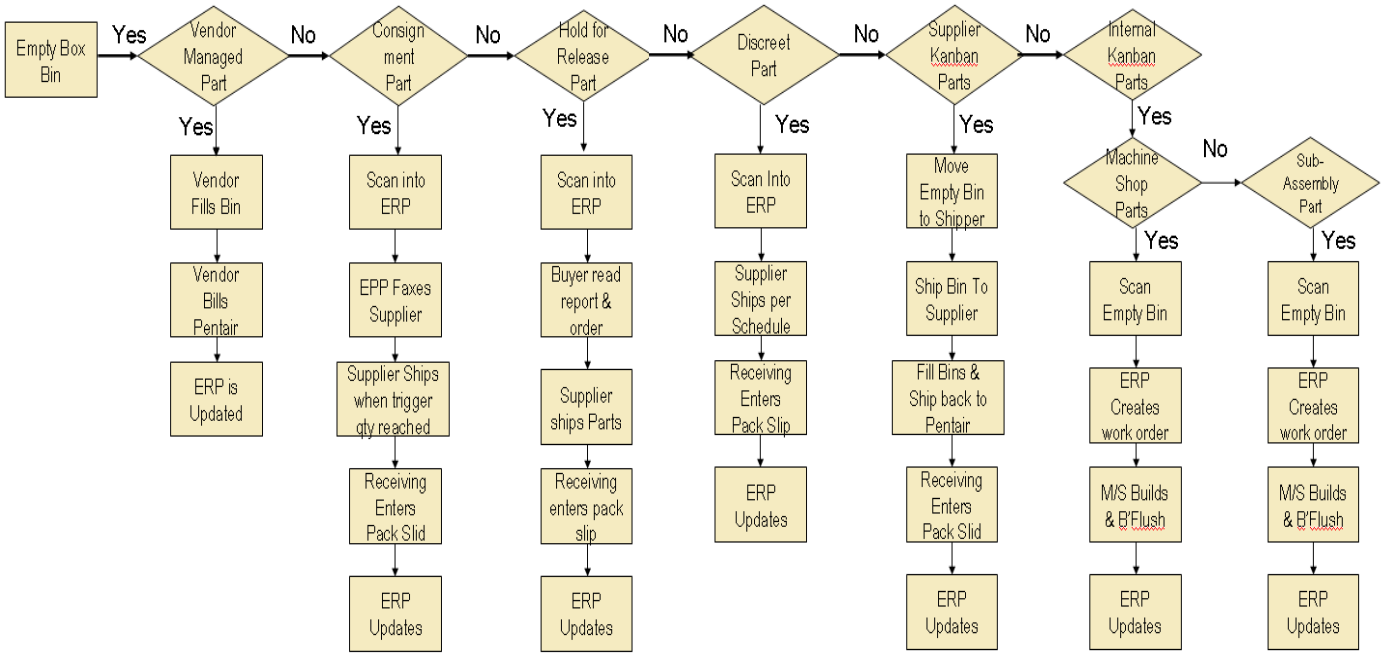

Figure 2: Information Flow Analysis

Problems:

- Scanning cards when boxes are empty by floaters is unreliable
- A buyer manually reviewing an inventory report to see what needs to be ordered is unreliable.
- Discreet Parts suppliers are dictated to Elba without regards to quality or timely delivery. Historical events cause Elba to increase the amount of safety stock to compensate for quality and delivery issues adding even more inventory.
- Large quantity orders are skidded and crated so that warehouse employees have to break them down.
- Some parts can have as many as 6 locations for the same part.
- Floaters getting boxes from flow racks, filling feed tubes and returning boxes is very labor intensive.

Current State Measurable

Travel Distance:

Receiving dock to warehouse location – 142 feet
Warehouse to flow rack – 260 feet
Flow rack to work cell – 124 feet

Dock to Dock Time

Consignment Part (20% of parts)
13168 - Brine Valve Cam - New Berlin Plastics
Time on flow rack – 2 days
Time in work cell – 4 hours
Time as finished product – 1 day
Hold for Release Part (50% of parts)
15168 – 5600 Piston – Henderson Machine
Time on flow rack – 7 days
Time in work cell – 4 hours
Time as finished product – 1 day
Discreet Parts (10% of parts)
40679 – ETR Circuit Board – Computime Electronics
Time in warehouse – 73 days
Time on flow rack – 2 days
Time in work cell – 4 hours
Time as finished product – 1 day

Stock outs:

Average 4 stock outs per week.
Average 2 hours lost per stock out.
Average 36 missed delivery dates per month caused by stock outs (Fiscal Year 06)
Increase of $300,000 in inventory to buffer suppliers that have chronic stock outs

4. Lean Principles to Apply

Elba was interested in the Plan for Every Part (PFEP) concept for their facility. Plan for every part utilizes many Lean Manufacturing principals such as standardization, minimizing inventories, reducing paper work, removing human error, and utilizing visual factory. Because the nature of Elba's business is assembly, and each product contains over a hundred purchased components it is important to have a plan for every part. Below is a summary describing PFEP, PFEP is the basis of our study.

Plan For Every Part

PFEP is a system for creating a lean flow of purchased parts. While it involves many formulas, standards and forms it can be generalized in 4 steps: gather information, create a location for every part, setup supplier delivery times, and create a system for automatic replenishment.

1. Gather information about every part including but not limited to:

Part #
Description
Daily Usage
Storage Location
Order Frequency
Supplier
Supplier Information
Container Type
Container Weight
1 part Weight
Total Package Weight
Container Dimensions
Hourly Usage

Transit Time
Carrier
Etc.

2. Create a "Supermarket" location for every part.
   Based on the above information work with supplier to standardize packaging size, delivery quantities and delivery frequency. Goal is to lower lot size, increase delivery frequency and deliver parts directly from receiving to Supermarket.

3. Schedule delivery times and routs from "Supermarket" to work cell.
   Every X amount of time an employee would deliver X boxes of parts to its work cell location and scan the boxes to tell ERP system that they have been used.

4. Automatic replenishment from supplier
   When trigger quantities have been met ERP system will automatically fax or email a purchase order to the supplier.

The steps to implement PFEP

- Create a database to gather and maintain information about each and every part in the manufacturing process.
- Establish criteria for delivering parts from the Supermarket location to the work cell including frequency and quantity.
- Work with suppliers to package parts in the "delivery quantities" established above.
- Map a "delivery route" for material handlers to follow between the Supermarket and the work cells on a pre-established frequency.

By implementing the concept of PFEP, one can know where every part is, where it comes from, where to get it, what it does and how to put it on.

Establishing a plan for every part

- Choose a database
- Use a database that has sorting capabilities, such as Excel.
- Database must be user friendly and accessible to read and print facility wide
- Establish a PFEP manager
- The only person that can make changes to the PFEP
- Must be notified of any and all changes that are made to any part
- Need to maintain the PFEP on a common drive so that anyone throughout the company can view

How to implement:

- Choose a database
- Establish your own PFEP detail based on business requirement
- Populate the PFEP
- Do a plant layout locating the Supermarket and the work cells with smooth part flow in mind.
- Establish a delivery route and delivery schedule.

5. Future State and Recommendations

Due to time limitations of preparing this study, the company could not apply the proposed concept and we were unable to make a comparison between the old and the proposed situation (we could not compare between before and after situations). Hence, our recommendations are based on our theoretical believe of the benefits of the study:
The future state should include a method that will automatically trigger a delivery from the Supermarket to the work cell. With this, a delivery schedule should be developed; this schedule should include the material handler's routes, quantities they deliver, and when throughout the day the deliveries should occur. Parts should be received in packed quantities that correspond to the delivery amount and only "Discreet parts" should be held in the warehouse. Finally, all other parts should be moved from receiving directly to the supermarket to the work cell.

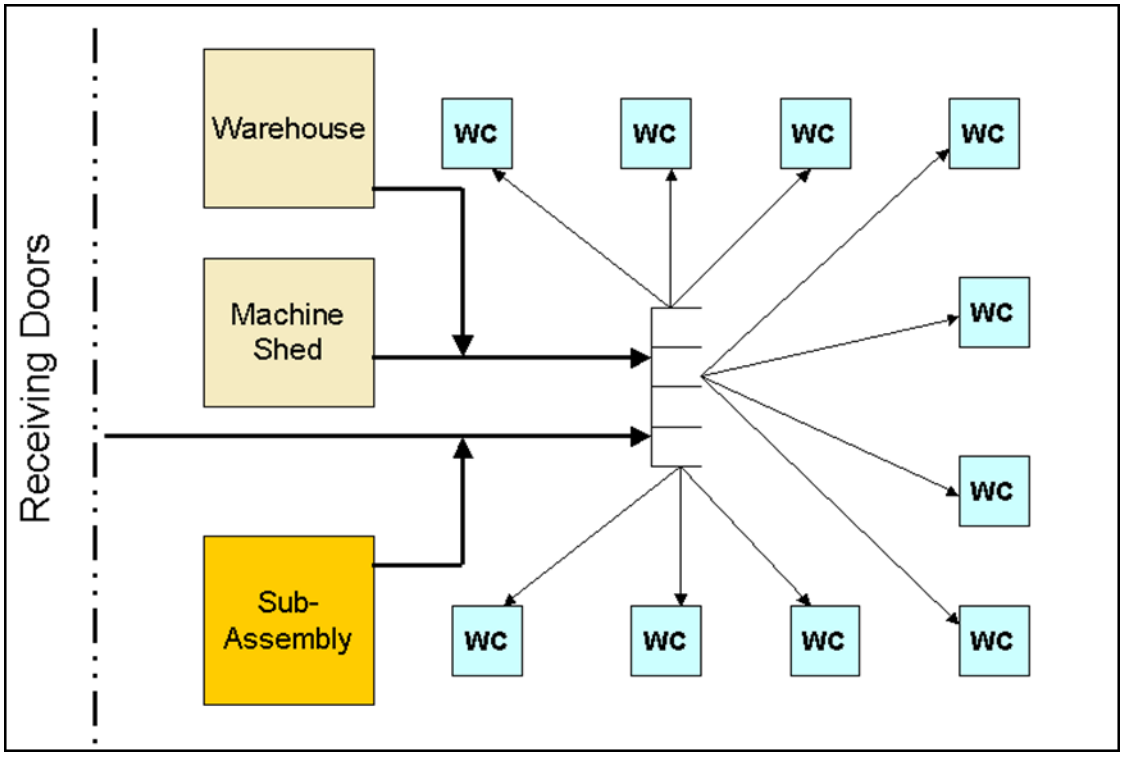

Figure 3: Part Flow Diagram – Future State Concept

6. Conclusion

1. Implementing a plan for every part will highlight and pinpoint the critical components (control parts) which are the reason for delay or stoppage. By identifying these parts, the suppliers can be contacted and a new strategy for filling Elba's demand can be developed.
2. The location of the supermarket needs further analysis. The location should be closer to the cells which demand more parts. (Closer to residential softener assembly cells rather than to the commercial ones, since the production rate for the residential is much higher).
3. Minimize the number of suppliers and strengthen the relationship with those Elba selects. The will allow Elba to receive higher quality parts, on time, and in quantities desired. The benefit for the supplier is steadier, increased and secure business. (See appendix B for vendor score cards)
4. Arrange with the suppliers to have a rent free permanent section for their parts in the supermarket. Allowing this will decrease lead times and decrease inventory levels for accounting purposes.
5. The management should explore the idea of mechanical conveyance devices between the manufacturing cells and the supermarket and/or between the warehouse and the supermarket.
6. The management should explore the idea of Focused Factory, which is a plant within a plant, or a sub-plant, devoted to producing a group of similar products. Temporary walls, partitions or lines on the floor would be the boundaries that separate one focused factory from another. Each focused factory has its own equipment and people. This concept will increase efficiency through repetitive production of a product family (learning curve).
7. Introduce the concept of Total Dock-To-Dock Time, First Time Through Capability, and Overall Equipment Effectiveness concepts to the management as a measurable matrices to act as a base for proactive improvement.

References

1. Data collected from Elba Water Treatment, Inc., Brookfield, WI.
2. Nicholas, J. and Soni, A., The Portal to Lean Production, Principles and Practices for Doing More with Less. Aurbach Publications, 2006.
3. Field, W. M., Lean Manufacturing. Tools, Techniques, and How to Use Them, The St. Louis Press/APICS Series, 2001.
4. Smith, R., and Hawkins, B., Lean Maintenance. Reduce Costs, Improve Quality, and Increase Market Share, Elsevier, 2004.
5. Hernandez, A., Just-in-Time Manufacturing, A Practical Approach", Prentice Hall, 1989.
6. Miller, D., "Going Lean in Health Care", Institute for Healthcare Improvement, Cambridge, MA, 2005.
7. Groover, M. P., Automation, Production System and Computer Integrated Manufacturing" Second Edition, Prentice Hall, 2002.
8. Liker, J. K., The Toyota Way, 14 Management Principles from the World's Greatest Manufacturer, McGraw-Hill, 2004.