Optimization of Material and Energy Exchange in an Eco-park Network Considering Three Fuel Sources

I. Kantor, A. Elkamel, and M. Fowler
Department of Chemical Engineering
University of Waterloo
200 University Avenue West
Waterloo, ON, N2L 3G1, Canada

Abstract

This work represents a quantitative assessment of the eco-park theory and its application to a case involving the export of several chemical products in addition to heat and electricity. The network is assessed in terms of environmental impact and profitability relative to existing facilities. GAMS software was employed to create the optimization problem akin to a typical transportation problem with added complexities associated with chemical processing at each node. Additionally, utilization of three different fuels as the primary source of chemical reagents and energy are considered. These fuels are coal and biomass for gasification or a steam-methane reforming process using natural gas as the fuel. The eco-park is shown to be more profitable than the comparable non-integrated set of facilities and the outputs are produced with a diminished environmental impact in terms of criteria air contaminants.

Keywords
Life-cycle analysis, GAMS, Eco-park, Operations research, Fuel comparison

1. Life-cycle Analysis
Key to the evaluation of the performance of industrial facilities is the concept of life cycle analysis. Life-cycle analysis (LCA) is a methodology developed to account for the impacts of a product, process or service over its entire lifetime from the initial extraction of materials from the ground to the final disposition back into the air, water or land. Life Cycle Analysis (LCA) is defined by the ISO 14040 standard in the following way: "LCA is a technique for assessing the environmental aspects and potential impacts associated with producing a product" (International Standards Organization 1997).

LCA is referred to as a major part of this work as the goal is to evaluate the viability of eco-parks based on life-cycle principles (Chertow 2004). Process improvements that simply push the product emissions to another processor cannot be considered as benefits for the process.

2.0 Eco-park concepts
The concept of an eco-park is described in several publications (Jacobsen 2006; Oh et al. 2005; Karlsson & Wolf 2008; Roberts 2004) and is described briefly here to illustrate the idea. Eco-parks are a method of industrial cooperation in which products, co-products and large centralized utilities can be operated to maximize the efficiency of producing a wide array of outputs within a fixed geographical area (Lambert & Boons 2002). Major impacts of eco-parks can be found in:

- Large plants for water/waste treatment, heat exchange and electricity production
- Exchange of products and co-products between facilities (Matani 2006; Lowe 1997)
- Waste reduction (Matani 2006; Lowe 1997)
- Optimized operation for profit or environmental performance (Lambert & Boons 2002)

It is the goal of this research to quantitatively exhibit the benefits of eco-parks in both the economic realm as well as for reducing overall environmental impact of manufacturing chemical products.

3. Societal Contributions

This research will contribute to society by developing a method for evaluating industrial relationships and by assisting in the planning of new facilities. This will benefit citizens as the optimization will take environmental factors into account and will attempt to minimize the overall waste from facilities that could otherwise affect living conditions in areas surrounding these facilities. The impacts on air, water and land can all be considered and the importance of the environment is taken into account in addition to the contribution to the economic performance of industrial processes. If construction of a new chemical facility can be made more economically feasible by its integration with other processes in the region, construction and factory workers would also be required to build and operate these facilities. This would contribute to the economic stability in the region in addition to causing a decline in unemployment rates.

4. Industrial Contributions

While environmental metrics are becoming increasingly important to business leaders, companies are still responsible to their shareholders to show solid and sustainable economic performance. The use of a dual-objective function allows for profitability to also be considered in the optimization and will lead to a solution that proves to be environmentally responsible as well as being economically feasible. This research is intended to reinvigorate discussions in the industrial sector regarding issues such as sustainability, process symbiosis and collaborative efforts. The eco-park concept is synonymous with polygeneration, industrial symbiosis and the like. All of these terms are based upon the concept of a diverse group of industrial producers cooperating to achieve a common goal of cost-savings and/or reduced environmental impact. Research has also shown that developing these eco-parks can very much be a driver for innovation and development of new technologies(Adamides & Mouzakitis 2009; Mirata & Emtairah 2005). The Dow Jones Sustainability index, DJSI, is an indicator used to manage investment funds based on sustainability metrics. The funds developed using this index showed solid growth since the inception of the program and is an indicator that sustainability within an organization can have significant impacts on profitability. Though the index also focuses on business practices and management styles, the overarching reality is that sustainability within a company yields financial performance results (Knoepfel 2001; Hoti et al. 2005).

The approach for this optimization is to observe the life-cycle impact of each product or process in the proposed network and to compare the eco-park scenario with a plant of comparable size operating as an independent facility. The eco-park concepts rely on collaboration from progressive facility managers in order to implement a symbiotic strategy for responsible and sustainable chemical processing.

5. Modeling

The model is formulated as a transportation problem with chemical reactions, conversions, product removal and recycling. The mass and energy balances must be written for each node in order to account for all of the flows of energy and material through the network. Following this, the reactions and transportation of materials and energy must be converted to a constraint-based optimization format in order to implement them within the model. The modeling is explained further in a previous publication by Kantor et al. (2012) and thus is not discussed here in detail. A schematic of the network is shown below in Figure 1.

5.1 Objective Function

A dual objective function is created in order to address the environmental concerns of the government and public while continuing to address economic factors presented by processing facilities. Exchanging materials and energy to reduce the life-cycle impact of the products allows for cost savings for the processor as well as reducing the emissions associated with the product; therefore, this type of arrangement is beneficial for producers as well as for society as a whole.

The objective function for this optimization is a construct of two objective functions. The two factors considered in this analysis are emission deviations from stand-alone plants as well as economic incentives. It is important to consider both of these objectives so as not to bias the output to be purely profit nor purely societal benefit from reducing emissions. The portion of the objective function that governs the reduction in emissions will tend to minimize the magnitude of all facilities; therefore, relying only upon this metric, the plant sizes would be reduced to zero. The economic portion of the objective function is then incorporated to add realism to the optimization as well as ensuring that the optimization will terminate with some plants have a size greater than zero as shown by equation 1.

$$Z = W_{LCE}J_{LCE} + W_e J_e \tag{1}$$

Where W_{LCE} and W_e represent the weighting factors associated with emissions and economics, respectively. The factors of J represent the collective calculation of the differential life cycle emissions and differential economics, respectively, as defined below in equations 2 and 3.

$$J_{LCE} = \sum_{p=1}^{n_p} EnvironmentalCost_p^m (S_p - I_p) \tag{2}$$

$$J_e = \sum_{p=1}^{n_p} [(ACC + OC)_S - (ACC + OC)_I]_p \tag{3}$$

Where

- p represents the plant and n_p is the number of plants
- environmental cost is a weighting associated with each emission, m
- S=Stand-alone facilities
- I=Integrated scheme
- ACC=Annualized capital cost
- OC=Operating Cost

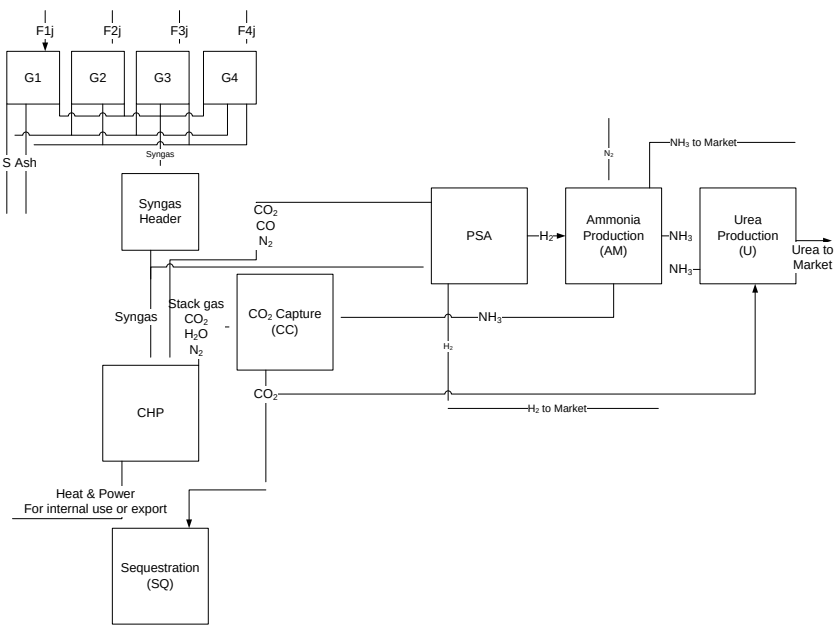

Figure 1: Network schematic

6. Results

As presented in previous work, the results of the model show that to produce the requirement for 1000 vehicles fuelled by hydrogen, the export of products from facilities will vary based on the weighting factor of life cycle emissions in the objective function. By varying the life-cycle emissions weighting in the range of 0, representing no impact of emissions on the objective function, to 1, representing no impact of profitability on the objective function yields the result shown by Figure 2.

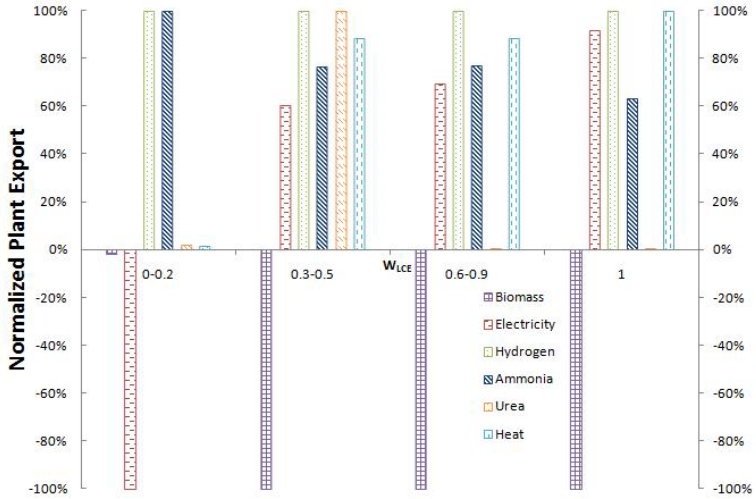

Figure 2: Normalized plant exports as a function of life-cycle emissions weighting (Kantor et al. 2012)

As referenced by the previous work, the possibilities of alternative fuel sources should be considered. For this work, coal and natural gas have been considered as possible alternatives to biomass as the primary fuel source for gasification. Modifying the model to accept a variety of fuel sources as inputs to the eco-park shows any potential benefits which may arise from utilizing a traditional fossil fuel as a gasification or steam-methane reforming (SMR) fuel, providing that the network still provide an adequate level of hydrogen for 1000 fuel cell vehicles. The weighting for life-cycle emissions and profitability were set to the baseline level of 0.5 for each factor. Figure 3 and Figure 4 show the results of the updated modeling.

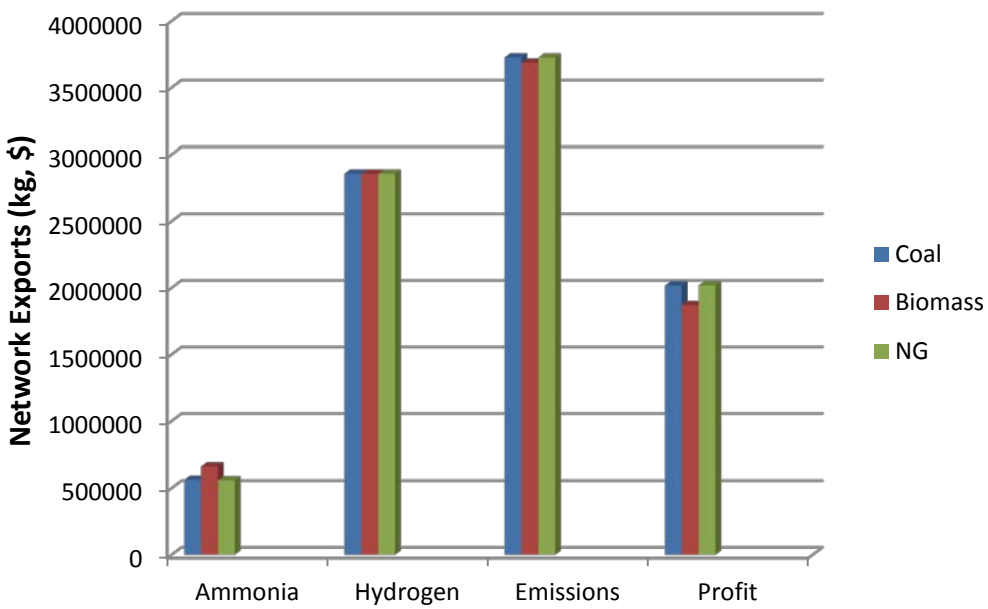

Figure 3: Network product exports and profit for three different fuels

In terms of profitability, the model shows that biomass is the least profitable fuel to use and that natural gas yields slightly higher profit than coal. The reasoning for a slight but marginal difference here is due to a differing network price structure considering SMR instead of gasification of coal or biomass. The biomass yields a lower net profit due to a lower energy density and increased processing complexities associated with utilizing biomass in the system. The total emissions, surprisingly, is similar for all three fuels. Any potential emission reduction from utilizing biomass as a feed is offset by the increased transportation emissions of the biomass and the fact that reforestation has not been considered as it is not a part of the networks operations. It is assumed that inclusion of reforestation

annualized over the eco-park lifetime would reduce the total emissions produced by utilizing biomass as a fuel. The hydrogen, as mentioned, has a fixed level in order to produce the required fuel for 1000 vehicles and thus it is constant across the three fuels considered. The production of ammonia varied slightly for the three fuels, with the largest amount being produced while utilizing biomass as gasification feed.

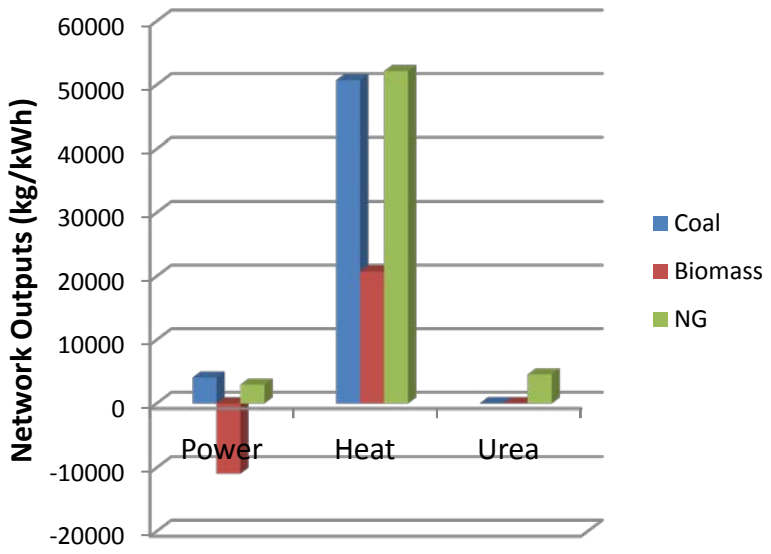

Figure 4: Network exports of power, heat and urea for three different fuels

Figure 4 shows the heat, power and urea output for the three fuels. Immediately, it can be seen that the net power export for using biomass is a negative value, indicating that power import is required. Both fossil fuels show a net export of power, although the level in very low. Heat output is also dramatically lower for biomass than for coal or natural gas, although this was expected due to the lower energy content in the fuel. The only fuel which showed a meaningful production of urea was natural gas. Due to the inclusion of life-cycle emissions as part of the objective function, ammonia is typically a high-output product compared to urea as the additional processing of ammonia to produce urea generally does not produce a favourable cost/benefit transaction in terms of the objective function. With the case of natural gas, the cost of erecting the urea facility is only slightly overcome by the profitability associated with the product. For the other fuels, this barrier is not exceeded and thus urea is not produced in any quantity.

7. Conclusions

Life cycle analysis and eco-park network optimization are shown to provide an excellent pairing for assessing this type of arrangement. The emissions from producing typical chemical exports are reduced when operating within the construct of an eco-park network and the profitability of the network is also increased. The optimization of this network with three different fuels shows that biomass has slightly less effect on the environment but with reduced profit and a net import of electricity from an outside source. This assessment does not include the emissions offset associated with reforestation.

References

[1] Adamides, E.D. & Mouzakitis, Y., 2009. Industrial ecosystems as technological niches. *Journal of Cleaner Production*, 17(2), pp.172–180.

[2] Chertow, M.R., 2004. Industrial Symbiosis. In *Encyclopedia of Energy*. New York: Elsevier, pp. 407–415.

[3] Hoti, S., McAleer, M. & Pauwels, L.L., 2005. Modelling environmental risk. *Environmental Modelling & Software*, 20(10), pp.1289–1298.

[4] International Standards Organization, 1997. Environmental Management - Life Cycle Assessment - Principles and Framework ISO 14040.

[5] Jacobsen, N.B., 2006. Industrial symbiosis in Kalundborg, Denmark: A quantitative assessment of economic and environmental aspects. *Journal of Industrial Ecology*, 10(1-2), pp.239–255.

[6] Kantor, I., Fowler, M. & Elkamel, A., 2012. Optimized production of hydrogen in an eco-park network accounting for life-cycle emissions and profit. *International Journal of Hydrogen Energy*, 37(6), pp.5347–5359.
[7] Karlsson, M. & Wolf, A., 2008. Using an optimization model to evaluate the economic benefits of industrial symbiosis in the forest industry. *Journal of Cleaner Production*, 16(14), pp.1536–1544.
[8] Knoepfel, I., 2001. Dow Jones Sustainability Group Index: A Global Benchmark for Corporate Sustainability. *Corporate Environmental Strategy*, 8(1), pp.6–15.
[9] Lambert, A.J.D. & Boons, F.A., 2002. Eco-industrial parks: stimulating sustainable development in mixed industrial parks. *Technovation*, 22(8), pp.471–484.
[10] Lowe, E.A., 1997. Creating by-product resource exchanges: Strategies for eco-industrial parks. *Journal of Cleaner Production*, 5(1-2), pp.57–65.
[11] Matani, A.G., 2006. Strategies for better waste management in industrial estates. *Journal of Industrial Pollution Control*, 22(1), pp.67–72.
[12] Mirata, M. & Emtairah, T., 2005. Industrial symbiosis networks and the contribution to environmental innovation: The case of the Landskrona industrial symbiosis programme. *Journal of Cleaner Production*, 13(10-11), pp.993–1002.
[13] Oh, D.-S., Kim, K.-B. & Jeong, S.-Y., 2005. Eco-Industrial Park Design: a Daedeok Technovalley case study. *Habitat International*, 29(2), pp.269–284.
[14] Roberts, B.H., 2004. The application of industrial ecology principles and planning guidelines for the development of eco-industrial parks: an Australian case study. *Journal of Cleaner Production*, 12(8-10), pp.997–1010.