Design for manufacture and assembly of a paper cup making machine in a developing nation

Kudakwashe N. Masengere
Department of Mechanical Engineering,
University of Zimbabwe,
P.O Box MP167,
Mt Pleasant, Harare
Zimbabwe
kudamasengere@gmail.com

Tawanda Mushiri
Department of Mechanical Engineering,
University of Zimbabwe,
P.O Box MP167,
Mt Pleasant, Harare
Zimbabwe
tawanda.mushiri@gmail.com

Abstract

This paper is on the design for manufacture and assembly of a paper cup making machine for a developing economy which can be locally manufactured within an income and expenditure that suits most small to medium businesses (SMEs). The current problem is that current computer controlled paper cup making machines on the market are expensive and therefore not affordable for a developing economy. Through wide research of how current paper cup making machines work, it was possible to come up with a low cost effective solution. A deeper understanding of the paper cup making machine was conducted with the aid of the internet, scholarly journals and industrial visits to local companies. The manufacture of this paper cup making machine is advantageous to a developing nation by creating jobs and thus eliminating poverty.

Keywords
Design, Paper cup making machine, Small to Medium Enterprises, Finite Element Analysis, Developing nation.

1.0 Introduction

A paper cup is a single-use cup manufactured from paper and to prevent the passage of liquid from a paper cup, it's usually coated with plastic or wax. Paper cups are manufactured from recycled paper and have various uses around the world {Kelley, 2001 #3}. In a wide range of customs and social classes their main use is to quench thirst. Paper cups have different distinctive appearances, sizes and designs with each type of design having an intended purpose depending on the type of liquid they hold and on occasions they are used. Some decorative patterns on paper cups are used at special events or celebrations to serve alcoholic beverages such as cocktail, liquor and wine. In situations where washing is unavailable or it is a time consuming process, it results in using paper cups in fast food restaurants to serve prepared food thus making sure that waiting lines and service costs are reduced. Hospitals and nursing

homes use disposable cups to feed their patients because they are made germ free and they get rid of them after use which results in maintaining good health and preventing disease transfer in hospitals and clinics{Foodservice Packaging, 2012 #4}.

Figure 1. Image showing the different types of designs of paper cups {MPW Marketing, 2005 #5}

In the paper cup manufacturing industry, paper cups are made from a series of various processes depending on the type and the intended use of the paper cup. First of all disposable cups which include paper cups are made from a paper cup making machine by feeding a large roll of paper which is first printed and then cut into small pieces which are fed into the machine and go through a series of processes to produce a paper cup as the final product which may be used in different places like hospitals, catering purposes etc.

1.1 Background

Paper cups do not have accurate or correct background existence but they have been traced to have been used as far back as Imperial China. Paper cups started to be widely held among the general public around the beginning of the 1900's when people accepted that sharing water jugs also intended to convey the sharing of germs. The paper cup gradually became more advanced in the 20th century when it shifted from being a simple health solution to being a convenient object. The demand for paper cups is very high that about millions of paper cups are used each day so that people can serve themselves whilst they are performing a certain activity which is generally accepted in today's busy world. Another great use of the paper cup is at large events ,for example weddings and church gatherings such that they can be recycled at the end of the day instead of having 1000's of paper cups being washed{Schmelzer, 2000 #9}.With the increase in the demand of paper cups in the country and continent the need has risen for a design of a paper cup making machine in a developing nation. This machine will efficiently meet the demand since making cups manually has been a laborious and a time consuming process which is done in some underdeveloped countries. The major problem in developing nations like Zimbabwe is that we have very few paper cup making industries which work productively and the local markets face challenges of sufficient supply of paper cups and local industries fail to meet the very high demand of paper cups since these machines are not made locally. This problem is normally tackled by importing paper cups and efficient paper cup making machines but the duty fees paid at the boarders paired to the transport expenses incurred during importing will cause a major drawback to the paper cup suppliers in the developing nations because of these expenses. The high costs of these faster and efficient automated paper cup making machines is mainly due to the high degree of complexity in the quality checking systems, plurality of motors used and PLCs which are manufactured in developed countries like China and India. The figure below shows a very modern paper cup making machine modelled in developed countries.

Figure 1 Paper Cup Making Machine (FMCG 2016**)**

The problems stated above hence presented the need to come up with a design of a paper cup making machine which can be manufactured in a developing nation like Zimbabwe to meet the demand and a design which is affordable so as to create employment in a harsh economic environment since it is an example of a developing nation endowed with natural resources that are in abundance. This paper focuses on the design of an uncomplicated, affordable machine which works productively with less wasted effort or costs.

2.0 Literature review

A paper cup making machine is defined in general as machine which manufacture paper cups having either an a electronic or a timed mechanical system for feeding and folding sidewall/bottom blanks of paper, heating to combine sidewall and bottom wall blanks, rimming to form a curl lip on the upper edge of the sidewall blank (DR Konzal 1994).

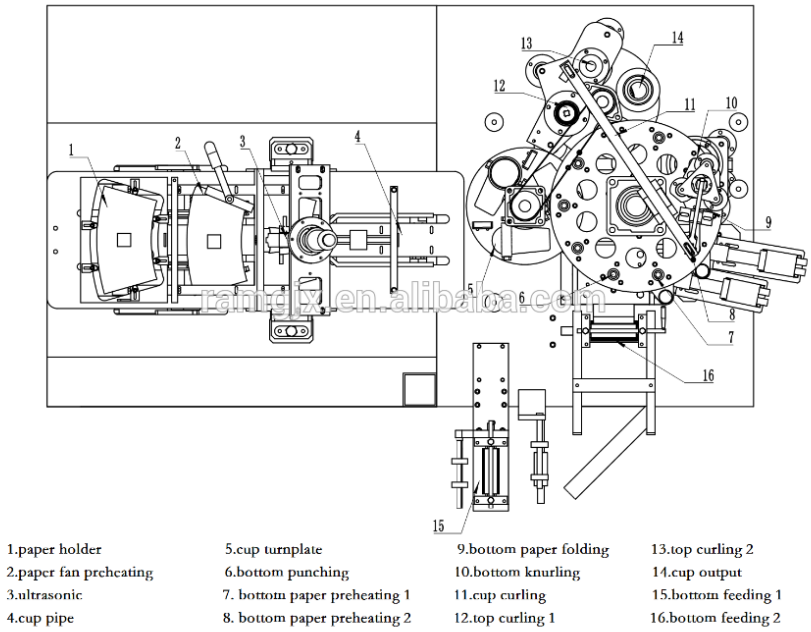

Figure 2 Basic processes in a paper cup making machine(Machinery 2009)

The paper cup making machine comprises of 6 main workstations which are the bottom placer station, folding wing, bottom heat station, bottom knurling, rimming (curling) station and blow off station as shown by the flowchart above. The diagram below is a summary of the combined rim curl and bottom heating process in a paper cup making machine.

Figure 3 Bottom heat station (King 2015)

A: Pre -Heating Furnace,
B: Pre-Folding Furnace and heating,
C: Bottom Knurling Furnace
D: Cup Top Curling Furnace(King 2015)

2.1 Bottom placer workstation

This is the first workstation in a paper cup making machine where bottom discs are drawn from a bottom disc magazine to the end of the mandrel by a double arm side pickup assembly. The double arm consists of four cups which are rotated first in one direction where air is drawn in the vacuum cups to pick the blanks and rotated in another direction to line up with mandrel and pressure is supplied in the cups to release the discs on to the end of mandrel. Air is drawn from a sintered plate to create a vacuum which draws and holds the disc on the mandrel (Konzal 1994).Other paper cup making machines have an extended bottom blank work stations which combine blank cutting and feeding on a single machine which consist of a narrow web of blank material, where uncut paper is fed into the workstation and is pressed against a circular edge to come up with a bottom blank of the desired form and size. Once bottom blank cutting is done a vacuum plate forces discs through a sleeve slightly smaller than the blanks from the web to the feed hopper which forces them into an attachment with the adjacent mandrel. Machines with an extended bottom blank station encounter problems between the punch and draw where paper dust piles up in between sliding machine components thus resulting in inefficient operation of the machine. To prevent errors in production like having leaky cups most of these paper cup machines have employed automatic cleaners and have to be inspected regularly(Budziszewski 1997).

3.0 Methodology

The designers will follow a series of steps that will guide him to solve the problems and fulfil the project objectives. The Engineering design steps are shown below.

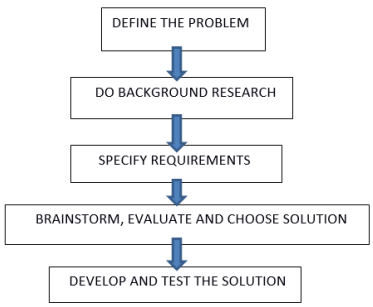

Figure 5. Design progess (Science Buddies 2010)

The designers will repeat these steps as many times as possible to see if there are any improvements to be performed along the way and this method will give the designer an opportunity to learn from failures. ANSYS 2016 was used in analysing the Von Mises stress in the main drive shaft. To control the vacuum pressure distributor in the machine designer used Siemens SMT version 3.3.1.Solidworks 2016 was used to draw machine components and cam calculations. The machine to be designed is shown in table 1.

Table 1. Paper Cup Machine Specifications

Specification	***Rating***
Power	8 kW
Production capacity	40-55 PCS/min
Voltage source	380V,50Hz
Overall dimensions	2600x1300x1800 mm
Paper grams	140-350g/m^2
Cup size	4-24 Oz
Weight	1500kg
Cup size	120-480 ml

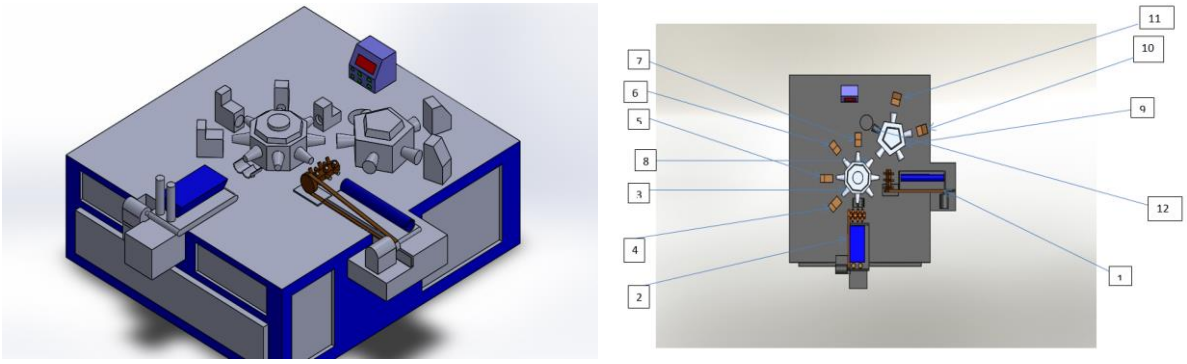

Figure 6. a.) Double turret paper cup making machine b.) Schematic layout of a paper cup making machine

The double turret paper cup making machine design consists of 4 main components the blank feeder station, heater station, bottom knurling and a rimming station which has its own turret. The blank feeder station consists of the sidewall feeder and bottom-wall feeder station. Bottom blanks are advanced to the mandrel turret by a vacuum pickup system which is driven by a v-belt drive system as shown in the diagram above. The vacuum pickup station is driven in synchronism with bottom wall blank feeder station by a belt-pulley drive system. The mandrel turret is then stepped on to the next station after receiving the bottom wall blank. Sidewall blanks are fed on the folding wings and are advanced to the heater station. After folding the semi-finished bottom seam is heated by supplying air through a heater which then heats the bottom edges of the sidewall blank. The bottom knurling station folds the sidewall blank overlapping edges and punches the bottom part of the paper cup to form a bottom seam. The paper cup is advanced to the rimming turret which forms a top edge curl on the paper cup by moving the top edge of the paper cup into a die curling ring.

4.0 Results

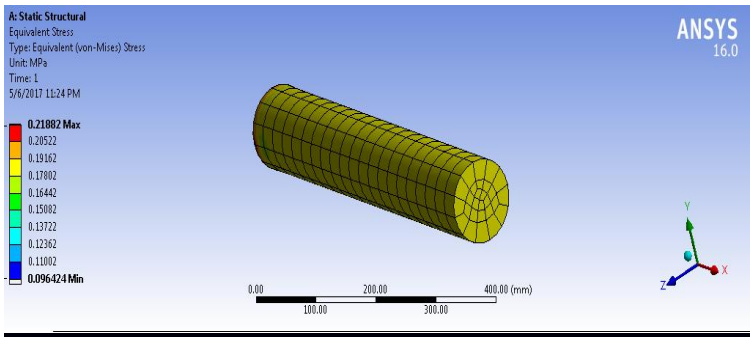

Figure 7. Von Mises stress analysis of the main drive shaft under axial and bending *load (ANSYS)*

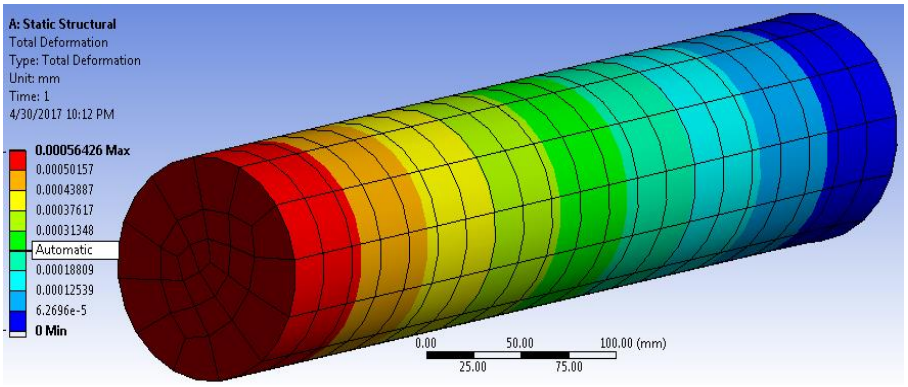

Figure 8. Total deformation of the main drive shaft (ANSYS)

The exaggerated shape of the shaft explains the linear relationship of diameter and strength (as diameter increases the strength of the shaft increases). Since this design has a minimum factor of safety of 7(from ANSYS). The design stress is calculated as: $\sigma_d = \frac{\sigma y}{F.S} = \frac{2.18*10^5}{7} = 0.0312Mpa.$

$$\sigma' \leq \sigma_d$$

$$\mathbf{2.47*10^{4}Pa} \leq \mathbf{3.12 * 10^4 Pa.}$$

The maximum von Mises stress is less than the design stress of the main drive shaft. Therefore the design is safe.

4.1 Von Mises Stress Analysis of The Rimming Turret shaft (ANSYS)

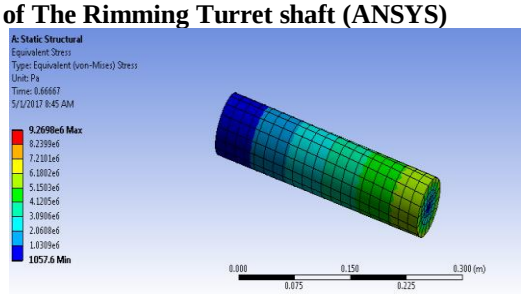

Figure 9. Von Mises stress analysis of the rimming turret shaft

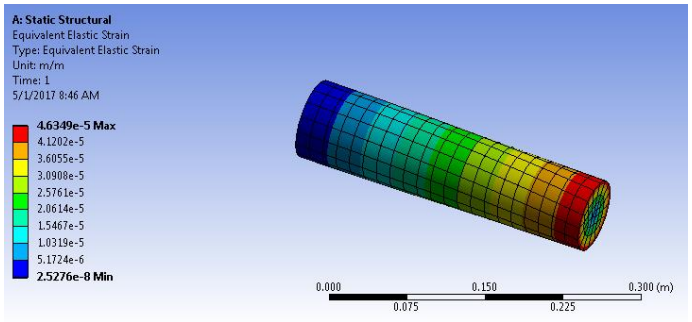

Figure 10. Equivalent Elastic Strain of the rimming turret shaft

The maximum von Mises stress on the bottom punch shaft occurs on the region closest where the shaft is attached to the sprocket. Since the Von Misses stress is ($7.12*10^6$N/m^2) is less than the yield strength ($9.2698* 10^6$ N/m^2) therefore the design is safe. The stress analysis results above showed that the maximum Von Mises ($\boldsymbol{\sigma_v}$) in each of the tested components were well below the yield stresses ($\boldsymbol{\sigma_y}$) of the respective components. Therefore under normal operating circumstances shall these components fail.

4.2 Bending moment calculations of the turret stand

<u>Main considerations in the calculations</u>

(1) The mandrel frame is treated as a rectangular frame.
(2) Made of steel
(3) Assuming it being subjected to a uniform concentrated load since mandrel turret and the rimming turret are not very far apart.
(4) The plate is clamped at all edges

The maximum deflection of the turret frame clamped on its edges is given by:

$$Y_{max} = \frac{3qL^4}{16Et^3}(1-v^2) \quad = \frac{3*290*2.6^4}{16*210*10^9*0.01^3}(1-0.3^2) \quad =0.01*10^{-3}m=\underline{\mathbf{0.01mm}}$$

The maximum radial stress is given by:

$$\sigma_{rmax}=\frac{3qL^2}{4t^2} \quad =\frac{3*290*2.6^2}{4*0.01^2} \quad =\underline{\mathbf{14.7MN/m^2}}$$

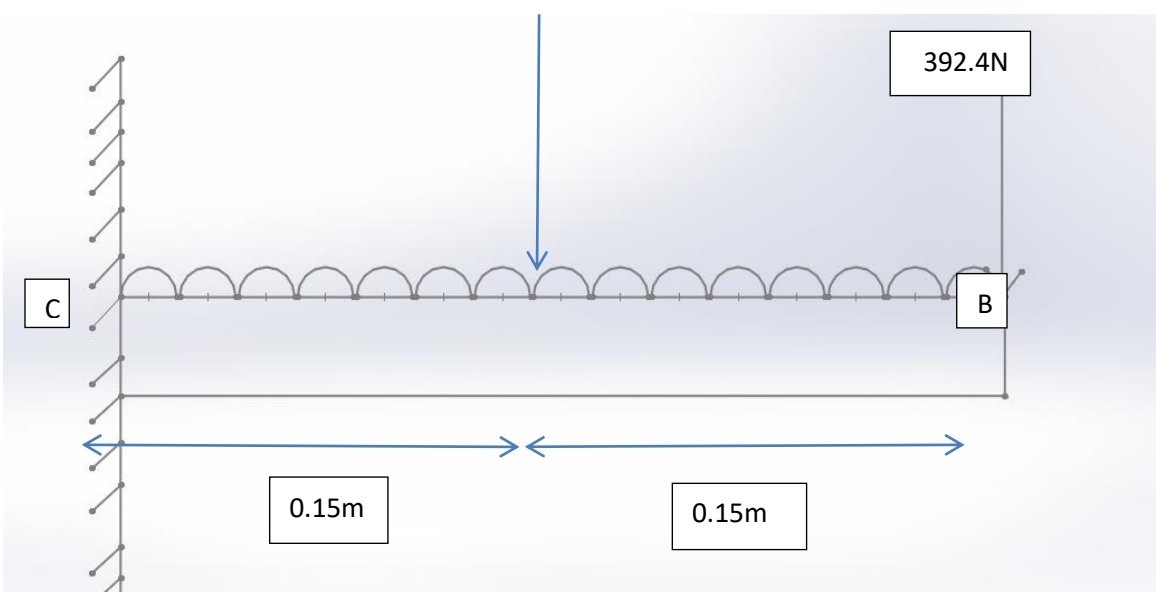

Figure 11. Bending moment analysis of the blank feeder stand

The slope and deflection of the sidewall blank stand can be found by modelling the stand as a cantilever. By application of the Mohr method the slope at B is given by:

$$=\frac{1}{EI}\{area\ of B.M\ diagram\ between B\ and\ C\}$$

$$=\frac{1}{EI}[A1+A2]=\frac{10^3}{EI}\left[\left\{\frac{1}{2}*0.3*(-196.2)\right\}\right]+\left[\left\{\frac{1}{2}*0.3*(-392.4)\right\}\right]$$

$$=\frac{10^3}{EI}[-29.43-58.86]=\frac{88290}{20*10^6}$$ **= 4.41*10^{-3}rad**

Deflection of A $=\frac{1}{EI}[first moment of area of B.M diagram between C\ and\ B]$

$$=\frac{10^3}{EI}\left[\left(\frac{\frac{-196.2*0.3*2}{3}*0.3}{2}\right)+\left(\frac{\frac{-392.4*0.3*3}{4}*0.3}{3}\right)\right]$$ $=\frac{-10^3}{EI}$ [-5.886-8.829] = -7.358*10^-4m =**-0.736mm**

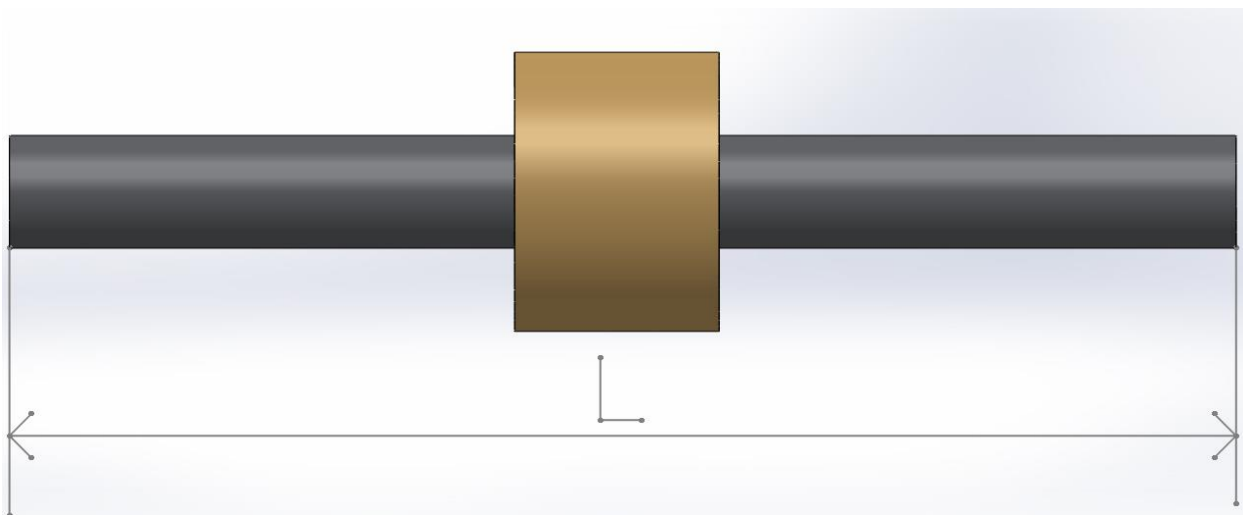

Figure 12. Mandrel turret main drive shaft

<u>Main drive shaft parameters</u>

(1) Diameter (d) of 55 mm.
(2) Length (l) of 600mm.
(3) Sprocket mass(m)=10kg
(4) Elastic modulus (E) for steel = 208GPa.
(5) Rotational speed (N)=60 r.p.m

The deflection (d) $=\frac{er^2}{1-r^2}=\frac{(0.5*10^{-3})*(0.0024^2)}{(1-0.0024^2)}$ **<u>d= 0.00000288mm</u>**

4.3 Control of the vacuum pressure distributor using Programmable Logic Controller (PLC).

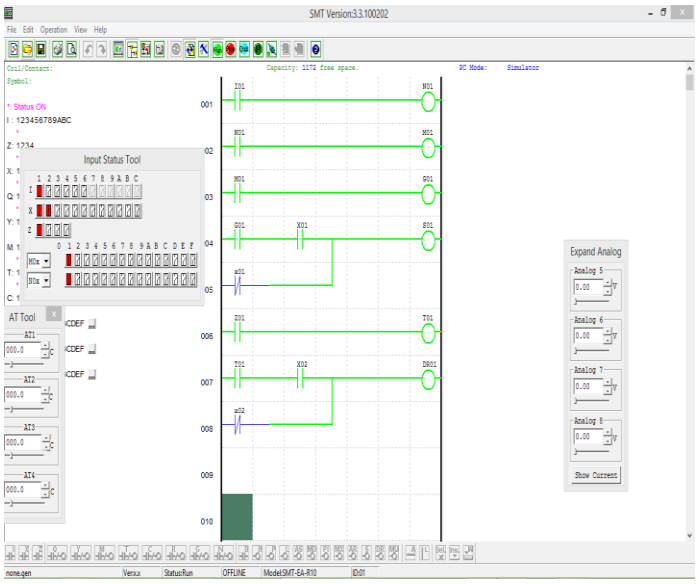

Figure 13. Automation of the vacuum pressure distributor (SMT Version 3.3.1)

The sensor (N01) takes note of the displacement (I01) of the conveyor blank feeder and feeds an input (N01) into the vacuum pressure distributor which rotates the vacuum cylinder 180˚ to face the mandrel turret and inputs (M01) which is sensed by sensor (G01).Sensor (G01) then activates the vacuum pump(X01) which feeds air into the vacuum cylinders to release the blank on to the mandrel (S01), (X01-) activates the pump to draw air in the vacuum cylinders. The vacuum pump switches gradually from suction to air release by adding a time delay of 5 seconds (Z01) which is noted by a proximity sensor (T01) which is fed as an input (T01) to the vacuum pump (X02) to draw air after 5 seconds as the sensor (DR01) notes the conveyor feeder displacement which is fed as an input (I01).

4.4 Machine drawings

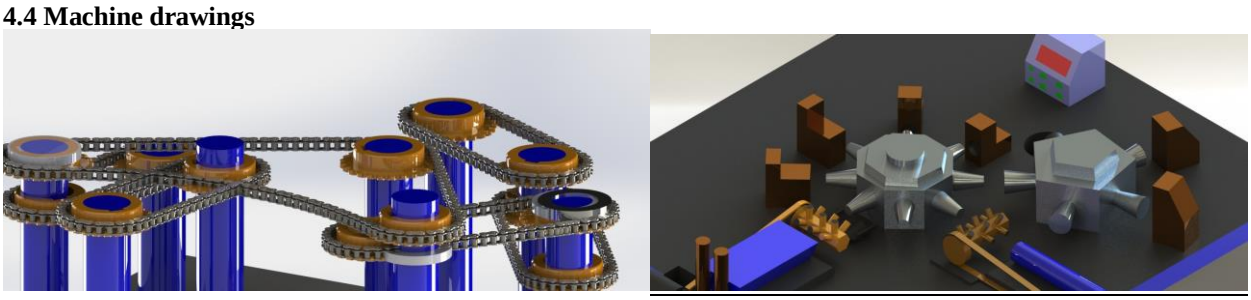

Figure 44. a.) Turret chain drive assembly b.) The Main Frame

A single-turret stepper motor drives the mandrel turret and the rimming turret through the chain drive system arrangement shown in the diagram.

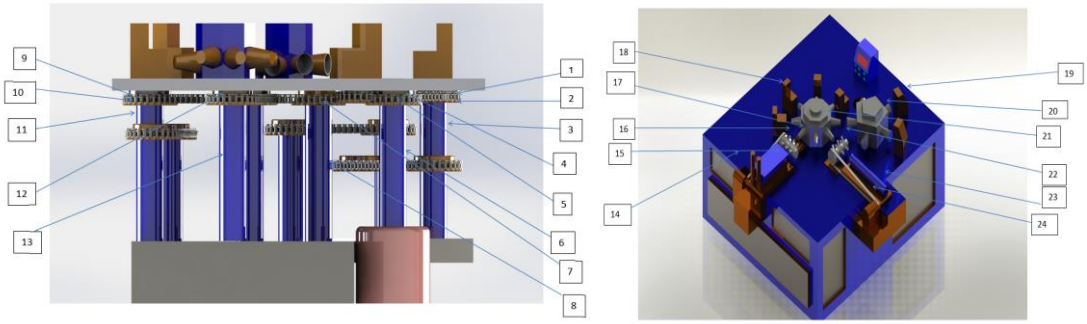

Figure 15. Final 3D Assembly showing all external components

Table 2. List of Machine Elements

BALLOON NUMBER	PART NAME
1	First curling die cam
2	First curling die sprocket
3	First curling die shaft
4	Second curling die cam
5	Second curling die bearing
6	Second curling die shaft
7	Rimming turret sprocket
8	Rimming turret shaft
9	Bottom punch cam
10	Bottom punch sprocket
11	Bottom punch shaft
12	Mandrel turret bearing
13	Mandrel turret shaft
14	Sidewall blank feeder motor
15	Sidewall blank feeder
16	Sidewall vacuum pickup assembly
17	Folding wing station
18	Second bottom punch station
19	Second curling die assembly
20	Rimming turret
21	Mandrel turret
22	Bottom wall blank vacuum pickup assembly
23	Blank wall blank feeder
24	Bottom wall blank feeder motor

5.0 Costing and analysis of the study

Table 3. Bill of machine components and raw materials

Part name	Description	Quantity	Unit Price($)	Cost
Rectangular sunk key	Ordinary mild steel	18	45c	$8.10
Diameter 55 solid steel drive shaft	Nickel chromium steel	1	$30.00/m	$18

Diameter 35 solid steel shaft	EN 19 T steel	8	$24.00/m	$48
Diameter 15 solid steel shaft	EN 19T steel	2	$11.00/m	$4.30
Split taper bushed sprocket	4 teeth(3/8 " pitch)	8	$14.00	$112
Type 'A' sprocket	31 teeth (3/4" pitch)	5	$13.32	$67
Cam and follower assembly	Radial cam (Chrome) and roller follower	6	$2	$12
Bearings	SKF 61907	4	$25.00	$100
Bearings	SKF 61907	4	$30.00	$120
Bolts and nuts angular Bearings	SKF 61909 Angular	6	$30.00	$180
12 Hp main drive electric motor	3 Phase AC Stepper motor	1	$500.54	$500.54
0.076 Hp electric motor	3 Phase AC Stepper motor	2	$66	$132
44mm steel pulley	Single grooved for type A belt	2	$5.00	$10.00
132mm steel pulley	Single grooved for type A belt	2	$16.00	$16.00
Blank feeder	Polyester conveyor belt	2	$8.30	$16.50
0.014 Hp electric motor	3 phase AC stepper motor	1	$23.00	$23.00
Type A V-belts	Heavy grade rubber	2	$7	$14.00
VFD	PWM speed control	1	$95.00	$95.00
PLC	Siemens step 7	1	$110	$110
Heating element	Nichrome 80/20(600Watt)	1	$26.00	$26.00
Vacuum pump	Rotary vane pump	1	$15.00	$15.00
Curling die assembly	58.5 mm die ring	2	$10.00	$20.00
Bottom punch station	58.5 mm diameter	4	$13.00	$52.00
Mandrel turret	350 mm octagonal aluminium turret	1	$45	$45.00
Rimming turret	350mm octagonal aluminium turret	1	$40	$40.00
Machine frame	Steel frame(2600*1300*1800)	1	$80	$80.00
Total				$3235

Table 4. Cost of manufacturing processes.

Process	Cost
Grinding	$30.00
Welding	$70.00
Milling	$20.00
Miscellaneous	$40.00

Total	$160.00

Table 4. Grand cost of the paper cup making machine.

Description	Cost
Machine components and raw materials	$3235.00
Manufacturing and processes	$160.00
Grand total	$3400

6.0: RECOMMENDATIONS AND CONCLUSION

The scope of the project was making the cost of the paper cup making machine as low as possible and increasing its efficiency, the researcher managed to meet the project objectives by coming up with an overall cost of $3400 of a paper cup making machine which produces 55-60 paper cups per minute as stated in the project objectives. This was achieved by using efficient mechanical drives which managed to reduce the plurality of motors in Computer controlled Paper Cup Making Machines from 26 to 4 motors (see Patent US 5324249). The purpose and the positive impacts of this project shall be plain to a developing nation economy after a prototype has been has been fabricated.

(1) Design for manufacture and assembly(DFMA)
The DFMA procedure of the double turret paper cup making has already been done.

(2) Vacuum pump installation
During bottom blank cutting a lot of dust is generated when thin strips of paper fall to the ground which can affect the machine operator's health. In order to maintain a healthy and clean environment it is recommended to install a dust removal system which uses a vacuum pump to suck all the trims on the base of the machine thus also reducing the chances of machine failure due to trims which enter in between any rotating part.

(3) Safety
Shafts transmitting high torques are always a risk; any failure should be averted by all means. This can be improved by developing shock absorbing systems to reduce the extent of damage in the case of any failures.
Stepper motor drives in the paper cup making machines are high voltage devices all wiring must be earthed and checked from time to time to see if there is any replacement required.

(4) Sensor devices
All sensing devices on the machine must be fully functional at all times, such that the operator is aware of any changes in the functionality of the machine. Such devices are also important in times of emergency which might require the machine to stop.

(5) Modification of the drive mechanism
This design of a plurality of chain drives which needs modification by installing an overload protection system to ensure that the drives will not be loaded beyond its load carrying capacity thus making the machine more efficient.

7.0 References

(Rose-Hulman), D. S. (2007). "Introduction to Design for (Cost Effective) Assembly and Manufacturing." Retrieved 12/01/17, 2017, from http://me.gatech.edu/files/capstone/L071ME4182DFA.

Alibaba (2014). "Shunda paper tea cup making machine." Retrieved 9 January 2017, from www.alibaba.com/product-detail/Shunda-paper-tea-cup-making-machine_60462493749.html.

ARIndustry (2016). "Machinery made in India." Retrieved 18 January, 2017, from http://www.arpapercupmachine.com/.

Bharath Machines (2016). "Cup Making Machines." Retrieved 18 January, 2017, from http://www.bharathmachines.in/cup-making-machines.html#fully-automatic-paper-cup-making-machine.

Bodendoerfer, R. (1973). Blank wrapping mechanism and method for frusto-conical cup-making machines, Google Patents.

Budziszewski, M. J. (1997). Bottom blank maker workstation for a cup making machine, Google Patents.

Chegg Study (2014). "Exploring python." Retrieved 22 January 2017, from http://www.chegg.com/homework-help/exploring-python-1st-edition-solutions-9780073523378?trackid=undefined.

Co, J. M. (2013). "Paper Cup Forming Machine." Retrieved 18 January 2017, from http://www.jkpapercupmachine.com/Paper%20Cup%20Forming%20Machine.html.
Complete Merchandise (2012). "Disposable Paper Cup Sizes." Retrieved 24 January, 2017, from http://www.completemerchandise.co.uk/blog/disposable-paper-cup-sizes/.

Corazzo, P. J. (1966). Paper cup making machine, Google Patents.

Dr.P.G.Leaney (1990). Design for Manufacturing and Quality within the context of Simultaneous Engineering. Loughborough University of Technology Dr.P.G.Leaney

Greenberg (2013). "Using Paper Cups for hot drinks." Retrieved 24 January 2017.

Horauf (2017). "High Perfomance Cup Making Machine ". Retrieved 20 January 2017, from http://www.horaufamerica.com/id8.html.

HoraufAmerica (2012). "Horauf America the art of America." Retrieved 21 January, 2017, from http://www.horaufamerica.com/index.html.

Industries, J. (2013). "Quality Solutions." Retrieved 16 January, 2017, from http://jpcdelhi.tradeindia.com/paper-cup-making-machine-2580204.html.

Industry, W. Q. (2004). "Wengzhou Qichen Industry." Retrieved 08/01/17, 2016, from http://machine-china.en.made-in-china.com/product/QBimHAtvYNhV/China-Cr12-Material-Big-Cam-China-Paper-Cup-Making-Machine.html.

Infinite Motion Control (2009). "Vacuum Leak Decay Testing." Retrieved 27 January, 2017, from http://www.infinitemc.com/vacuum-decay-leak-test.html.

Innovateus (2013). "What is an insulator." Retrieved 24 January, 2017, from http://www.innovateus.net/science/what-insulator.

Keep Cup (2010). "Enviromental footprint calculator considerations." Retrieved 22 January 2017, from http://www.keepcup.com/userfiles/files/KeepCup%20Calculator%20Considerations.pdf.

King, W. J. (2015). "Fully Automatic Paper Cup Making Machine." Retrieved 10 January, 2017, from http://jiakingco.gmc.globalmarket.com/products/details/full-automatic-paper-cup-making-machine-2201395.html.

Konzal, D. R. (1994). Cup making machine, Google Patents.

Konzal, D. R. (1998). Cup making machine, Google Patents.

Konzal, D. R. (2010). Bottom finishing station components for a cup making machine, Google Patents.

Konzal, D. R., C. N. Johnson, et al. (1984). Machine for forming seams of two-piece paper cups, Google Patents.

Kuchenbecker, M. W. (1993). Containers and blanks with a curled edge and method of making same, Google Patents.

Lifelang Machinery (2016). "Medium Speed Paper Cup Forming Machine." Retrieved 19 January, 2017, from http://sinceremachinery.com/2-1-medium-speed-paper-cup-forming-machine.html.

Machinery, D. X. (2016). "Know Everything About Paper Cup Machine." Retrieved 19 January 2017, from http://papercupmachineguide.blogspot.com/.

Machinery, M. (2009). "High speed wenzhou Paper Cup making Machine." Retrieved 6/01/17, 2016, from https://ramgjx.en.alibaba.com/product/60484228328-801915437/High_speed_wenzhou_Paper_Cup_making_Machine_prices_paper_cup_machine_price.html.

Mader, D. (2002).Machine to line containers with film, Google Patents.

Mannlein, D. J. (2004). Folding wing assembly for cup forming machine, Google Patents.

Mannlein, D. J. and J. J. Mitchell (2006). Bottom sealing assembly for cup forming machine, Google Patents.

Mannlein, D. J. and T. D. Pyper (2006). Computer controlled cup forming machine, Google Patents.

Owlcation (2016). "Surface Area of a Conical Frustrum. " Retrieved 22 January 2017, from https://owlcation.com/stem/Surface-Area-of-a-Conical-Frustum-Truncated-Cone.

Paper Machinery Corporation (2014). "Container forming machine." Retrieved 21 January 2017, from http://www.papermc.com/machines/paper-cup-container-forming-machines/pmc-1003-cup-container-forming-machine/.

PinpointTheWeakSpot (2011). "Paper cup equipment" from http://www.infinitemc.com/accelerated-liquid-leak-test.html.

Rexroth Bosch Group (2014). "The Drive and Control Company." Retrieved 21 January, 2017, from https://www.boschrexroth.com/en/us/home/index.

Sand, D. L.(2003). Automated system and method for forming two stage cup, Google Patents.

Science Buddies (2010). "The Engineering Design Process." Retrieved 25 January 2017, from http://www.sciencebuddies.org/engineering-design-process/engineering-design-process-steps.shtml.

Semi-Automatic Paper Cup Making Machine (2016). "Explore Machine Brick, Brick Making Machine China Products

Bricks." Retrieved 18 January 2017, from /www.pinterest.com/pin/461900505505148533/.

Sini (2016). "Paper Cup Forming Machine, Paper Bowl Forming Machine Manufacturer in China." Retrieved 19 January 2017, from http://cnsinimachinery.com/.

SKCrafts (2015). "Manufacturer & Supplier of High Quality Paper Cup Products."

Tedford, R. (2006). Insulated container, Google Patents.

YudiKuang, G. C., and Zhejiang Fang (2015). "A Facile Approach to Evaluate Thermal Insulation Performance of Paper Cups." Retrieved 30 January 2017, from https://www.hindawi.com/journals/ijps/2015/367962/.

Zhejiang Ruida Machinery (2017). "Connecting ". Retrieved 19 January 2017 from http://ruidamachinery.en.made-in-china.com/product-group/PoqxfGTrItcN/Paper-Cup-Machine-catalog-1.html.

ContactStressAnalysis (2012). "HertzianStress." Retrieved 12 May 2017, from www.google.co.zw/search?sclient=psy-ab&biw=911&bih=441&noj=1&q=+The+majority+of+the+designs+of+these+paper+cup+machines+weigh.

Biography

Kudakwashe Nigel Masengere is a Mechanical Engineering student at the University of Zimbabwe (2017). Contacted at kudamasengere@gmail.com

Dr. Tawanda Mushiri is a holder of **BSc Mechanical Engineering (UZ) in 2008**, Master of Science in Manufacturing Systems and Operations Management **(MSOM**) (UZ) in 2012 and a **D.Eng.** (**U.J**) in fuzzy logic systems of machinery monitoring systems in 2017. He is currently a Senior Lecturer and Acting Chairman at the University of Zimbabwe teaching Machine Dynamics, Robotics, Solid Mechanics and Finite Element Analysis in the department of Mechanical Engineering. He is also the coordinator of final year Undergraduate projects and Master of Science in Manufacturing Systems and Operations Management (MSOM).
Tawanda has supervised more than 120 students' undergraduate projects and 1 Masters Student to completion. He has also published 2 books, 3 chapters in a book, 9 journals in highly accredited publishers and over 80 conferences in peer reviewed publishers. He has done a lot of commercial projects at the University of Zimbabwe. He is a reviewer of 4 journals highly accredited. He has been invited as a keynote speaker in workshops and seminars. Beyond work and at a personal level, Tawanda enjoys spending time with family, travelling and watching soccer. He is contacted at tawanda.mushiri@gmail.com