Proceedings of the 2016 International Conference on Industrial Engineering and Operations Management
Kuala Lumpur, Malaysia, March 8-10, 2016

Heterogeneous Vehicle Routing Problem in a Supply Chain

Anil Kumar Agrawal and Prabhas Bhardwaj
Mechanical Engineering Department,Indian Institute of Technology (BHU),
Varanasi, UP, India (Tel: +91 542 6702779; e-mail: bhu.anil@gmail.com; pbhardwaj.mec@itbhu.ac.in).

.

***Abstract*— Vehicle routing is an important issue of logistics. It has been addressed by many researchers in different context of supply chain management. Vehicle routing problems have been also considered along with the problem of distribution planning. In the present work, the routing problem also considers distribution of products from a single depot to multiple suppliers in a specified time window. The vehicle may be of different types and capacities. This problem has been modeled as a mix integer linear programming formulations. Use of the proposed formulation is illustrated by suitable examples. Two formulations proposed in this work determine optimal logistic plan for the cases, one where number of vehicle of each type is pre specified and the second where it is to be optimally determined. Validation of the models is being carried out by varying the value of problem parameters and visualizing its effects on the objective function. The example problems very clearly demonstrate the advantages of having heterogeneous fleet of vehicle instead of homogeneous ones.**

KEYWORDS— VEHICLE ROUTING PROBLEM, TIME WINDOW, SUPPLY CHAIN MANAGEMENT, DISTRIBUTION

I. INTRODUCTION

Supply Chain Management (SCM) includes many activities such as movement and storage of raw-materials, work-in-process inventory and finished goods from point of origin to point of consumption. SCM, while viewed in terms of activities involved, has been defined as the designing, planning, execution, control and monitoring of the supply chain activities with the objective of creating net value, building a competitive infrastructure, leveraging worldwide logistics, synchronizing supply with demand and measuring performance globally. Looking at the chain partners, SCM is all about efficiently integrating suppliers, manufacturers, warehouses and stores so that merchandise is produced and distributed at the right quantities to the right locations and at the right time in order to minimize system-wide costs while satisfying service level requirements. This definition leads to several observations. First, SCM takes into consideration every facility that has an impact on cost and plays a role in making the product conform to customer requirements, right from supplier and manufacturing facilities through warehouses and distribution centers to retailers and stores. Indeed, in some supply chain analysis, it is necessary to account for the suppliers' suppliers and the customers' customers because they have an impact on supply chain performance. The second aspect of the SCM is about being efficient and cost-effective across the entire system, from transportation and distribution to inventories of raw materials, work in process, and finished goods. Thus, the emphasis is not simply on minimizing transportation cost or reducing inventories, but on taking a systematic approach to SCM. Since SCM is concerned with efficient integration of suppliers, manufacturers, warehouses, and stores, it encompasses a firm's activities at many levels, from the strategic level to the tactical level and then to the operational level.

Logistics Management is an important issue in supply chain management and is concerned with physical flow of materials from suppliers to the consumers. Logistics management is that part of SCM that plans, implements and controls the forward and reverse flow and storage of goods, services and related information between the point of origin and the point of consumption in order to meet customer's requirements efficiently and effectively (Drew and Smith, 1995). Logistics management is about beneficially choosing the most effective routes for transportation and discovering the most competent delivery methods with the help of software and IT resources to proficiently handle the related processes. The design of a transportation network impacts the performance of a supply chain. Designing issue does not limit itself to deciding on establishing the right infrastructure but is also concerned with taking the right transportation decisions including scheduling and routing of vehicles. A well designed transportation network allows a supply chain to achieve the desired degree of responsiveness at a lower cost. Transportation networks take variety of frameworks (Chakroborty and Dwivedi, 2002). An important part of logistics planning is vehicle planning and routing.

The vehicle routing problem refers to all problems where optimal closed loop paths are determined that touch different points of interest. There may be one or more vehicles. Generally, the points of interest are referred to as nodes. Further, the start and end nodes of a route are the same and are often referred to as depot. There are sub-classes of the vehicle routing problem and these vary from one another depending on the node and vehicle properties. Historically, many of these problems have specific names which have been used here. These problems are described briefly in the following subsections.

A. The Traveling Salesman Problem (TSP)

In this case, a single vehicle has to visit a set of nodes exactly once before returning to its starting position. Such problems implicitly assume that total of demand at various nodes is less than the capacity of the vehicle, or alternatively the capacity of the vehicle is immaterial to the problem. Here, optimality of a route is measured in terms of minimum route length. Practical examples of TSP include planning the route for a courier or for a vehicle that typically has to visit certain homes or nodes in an area. Other examples include that of developing a repairman's route, or that of a doctor making house calls. More importantly, TSP often forms a sub-problem of other vehicle routing problems. As an example of TSP, Figure 1 shows two possible routes for a courier serving five offices. Both routes are viable or feasible, yet the route shown in part (b) of the figure is desirable as the length of the route connecting all the five offices is less than the length of the route shown in (a). The purpose of TSP algorithms is to find a route with the least length. TSP is a difficult optimization problem as the number of feasible routes (from which the best is to be found) increases at a very fast rate with the increase in the number of nodes.

B. Single vehicle pick-up and delivery problem (SVPDP)

This problem is similar to a TSP except that each node is either a pick-up node or a delivery node. Further, there is a one-to-one, one-to-many, many-to-one, or many-to-many relation between the pick-up node set and the delivery node set. Obviously, a sequence of nodes where a delivery node appears before its corresponding pick-up node is not a valid route. As in the TSP, each node can have different service requirements. Such problems arise in situations such as where intra-city courier service personnel must pick-up and deliver mails among various offices in a city, or in situations where a garbage truck must leave from depot to collect garbage, deposit it at the dump area and then return to the depot, etc. Route length is an important optimality criterion in such problems. However, the riding time of goods (or people) between the pick-up point and the delivery point can in some cases be the optimality consideration. This problem is sometimes referred to as a traveling salesman problem with precedence constraints because there are constraints on how nodes can be ordered (a pick-up node must be before the corresponding delivery node).

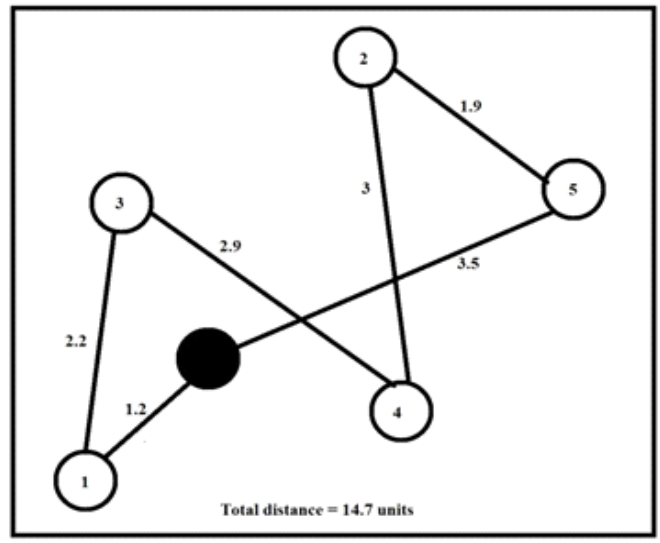

(a)

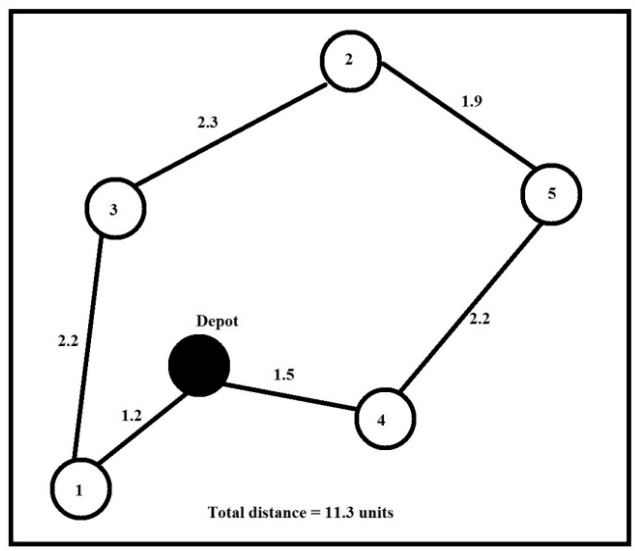

(b)

Fig. 1. Two different routes for a TSP

C. Single-vehicle pick-up and delivery problem with time windows (SVPDPTW)

This problem is the same as the SVPDP except that there is a time-window associated with each node. The vehicle serving a particular node must visit that node within the stipulated time window. In this problem, therefore, a sequence of nodes cannot be considered as a valid route if (i) a delivery node is visited before its corresponding pick-up node, and (ii) a node is not visited within the specified time window. A good example of this problem

is the dial-a-ride para-transit system where individuals ask the service provider to pick them up from a certain point within a certain time and drop them off at another point within a certain time window. The total route length is an important optimality criterion in these problems. Riding time is not as important since satisfaction of time windows imply, to a certain extent, the satisfaction of users from the riding time perspective.

D. Multiple vehicle routing problems

There may be instances where the vehicle capacity may fall short in meeting demands of all the nodes. In this case, more than one vehicle needs to be used if the demand is to be satisfied in one go, not in phases. Although the criterion for optimization can remain the same as in the corresponding single vehicle case, the multiple vehicle problems are in essence different from the single vehicle case. The difference arises because, as opposed to the single vehicle case, here, one is not sure which nodes need to be served by a given vehicle. That is, one does not know a priori which nodes a route should touch. All that is known is that all the routes put together should serve all the nodes in the problem. Typically, in these problems, it is assumed that complete service at a node must be provided by one vehicle; part service of a node is not allowed. Use of multiple vehicles, each for a different route, is depicted in Figure 2 wherein for each of the three routes, one vehicle is independently serving the corresponding nodes.

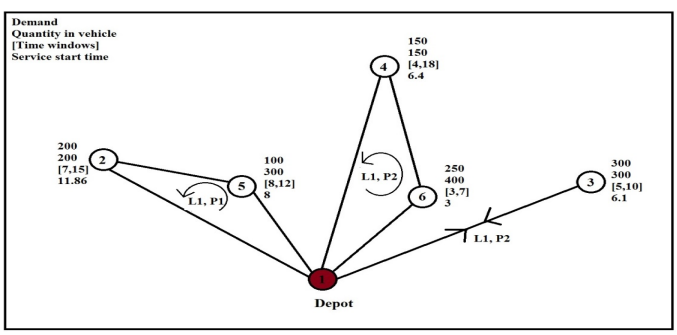

Fig. 2. Multiple routes in VRP

II. LITERATURE REVIEW

Researchers have taken vehicle routing problems with variety of characteristics such as time window for service start time, required service time (fixed and variable components), vehicle capacity limitation, maximum routing time and many others. The routing objectives are generally stated as minimization of travelling costs, fleet size or total distance of tours.

The time dependent VRP was first formulated by Malandraki (1989) and followed by Malandraki and Daskin (1992) using a mixed integer linear programming formulation. The time dependent vehicle routing problem (TDVRP) is defined as follows. A vehicle fleet of fixed capacities serves customers with known demands from a central depot. Vehicles are assigned customers and are routed in a manner such that the total time of traversing the routes is minimized. The travel time between two customers or between a customer and the depot depends on the distance between the points and time of day. The time dependent traveling salesman problem (TDTSP) is a special case of the TDVRP in which only one vehicle of infinite capacity is available. Time windows for serving the customers may also be specified.

Hill and Benton (1992) considered a node based time dependent vehicle routing problem (without time windows). Computational results for one vehicle and five customers were reported.

Malandraki and Dial (1996) proposed a dynamic programming aproach for TDTSP, i.e. for a fleet of just one vehicle. A nearest-neighbor heuristic was used to solve randomly generated problems.

Nabil Azi (2010) proposed a model for a VRP with time windows (VRPTW) where fixed sized and fixed number of vehicles are available at a depot to serve the demands of customers in a given time window. After serving the customers, the vehicles return back to the depot.

Damon Gulczynski et al. (2011) proposed integer programming formuation and a heuristic for multi-depot split delivery vehicle routing problem that combines the split delivery vehicle routing problem with the multiple depot vehicle routing problem. They apply their heuristic to 30 instances to determine the reduction in distance travelled by allowing split deliveries among vehicles based at the same depot and vehicles based at different depots.

Pureza et al. (2012) made a comprehensive study on VRPTW with multiple deliverymen where service starts at clusters (some combined customers) in given time window by the deliverymen who are assigned to each vehicle. Service time is inversely proportional to number of deliverymen. In practice this type of situation comes in long service time where additional men help to reduce the serve time. This helps to serve large number of customers in permissible time.

The present work addresses a variant of the above vehicle routing problem with time windows framework for start of the service but by heterogeneous fleet of vehicles having different capacities. The formulation proposed is used to solve example problems using LINGO (a Linear Programming solving software) and then the results are analysed. In section 2, proposed model for vehicle routing with heterogeneous fleet in supply chain has been presented. Third section includes the numerical

illustration and results. Section 4 consists of conclusions drawn from the present work.

III. PROBLEM AND FORMULATION

Here, the model for the heterogeneous fleet vehicle routing problem (HVRP) is proposed, which is more generalized and realistic vehicle routing problem. The heterogeneous fleet is assumed to consist of many types of vehicles. They may differ from each other in terms of their capacities, fixed hiring costs and travelling cost and variable cost on moving goods. HVRPs are commonly encountered because fleets are likely to be heterogeneous in most of the real life situations. The objective is to find least cost optimal vehicle routes starting from and ending at a single depot, while serving a set of nodes with known demands. All the nodes are visited only once and exactly by one vehicle. The total of the demand of nodes falling on a route will be at most equal to the capacity of the vehicle assigned to that route. Naturally, individual demand of any node is presumably not more than the capacity of a vehicle with maximum capacity. The routing cost of a vehicle is the sum of vehicle hiring cost, travelling cost, labour cost and transportation cost.

For the mathematical formulation of the problem the following notations are used.

Indices:

i, j	:	Nodes
l	:	number of deliverymen assigned to a vehicle representing mode of delivery as well
p	:	a vehicle type

Parameters:

C_p	:	hiring cost for one vehicle of type p
C_d	:	cost of covering unit distance
C_l	:	cost of one deliverymen
C_m	:	cost of transporting unit weight by unit distance
D_{ij}	:	distance of node j from node i
N	:	total number of nodes (node 1 is taken as depot and others as retailers)
N_p	:	number of vehicles of type p
Q_p	:	goods carrying capacity of vehicle type p in weight units
q_i	:	delivery requirement of node i
T_{sil}	:	service time requirement of node i for service mode as l
w_l	:	average weight of a deliveryman
(a_i, b_i)	:	time window range in terms of earliest arrival time, latest arrival time for visiting node i

Variables:

$$X_{ijlp} : \begin{cases} 1 & \text{if vehicle type } p \text{ travels from node } i \text{ to node } j \text{ in mode } l \\ 0 & \text{otherwise} \end{cases}$$

t_i	:	service start time at node i
Y_{jp}	:	load in the vehicle type p at the time of reaching node j
Y_{ijp}	:	load in the vehicle type p travelling from node i to node j
Y_{1jlp}	:	load in the vehicle type p right after leaving the depot and entering a node j in mode l

Using the notations, as described above, the problem is formulated and is shown below.

Objective Function:

Minimize

$$\sum_{p=1}^{P}\sum_{j=2}^{N}\sum_{l=1}^{L} C_p X_{1jlp} + C_d \sum_{p=1}^{P}\sum_{i=1}^{N}\sum_{\substack{j=1\\ j\neq i}}^{N}\sum_{l=1}^{L} d_{ij} X_{ijlp} + \quad (1)$$

$$C_l \sum_{p=1}^{P}\sum_{j=2}^{N}\sum_{l=1}^{L} l X_{1jlp} + C_m \sum_{p=1}^{P}\sum_{i=1}^{N}\sum_{\substack{j=1\\ J\neq i}}^{N} d_{ij} Y_{ijp}$$

Constraints:

$$\sum_{\substack{i=1\\ i\neq j}}^{N}\sum_{l=1}^{L}\sum_{p=1}^{P} X_{ijlp} = 1 \quad \nabla\, \mathrm{j} = 2,\ldots,\mathrm{N} \quad (2)$$

$$\sum_{\substack{i=1\\ i\neq j}}^{N} x_{ijlp} = \sum_{\substack{k=1\\ k\neq j}}^{N} x_{jklp} \qquad \nabla j = 2,\ldots,N;\ l=1,\ldots,L;\ p=1,\ldots,P \quad (3)$$

$$t_j \geq t + (t_{sil} + t_{ij}) X_{ijlp} \quad \nabla i = 2,\ldots,N;\ j=1,\ldots,N;\ l=1,\ldots,L;\ p=1,\ldots,P \quad (4)$$

$$t_j \geq (t_{1j}) X_{1jlp} \quad \nabla \mathrm{j} = 2,\ldots,\mathrm{N}; \mathrm{p}=1,\ldots,\mathrm{P}; \mathrm{l}=1,\ldots,\mathrm{L} \quad (5)$$

$$Y_{1jlp} \leq (Q_p l w_l) X_{1jlp} \quad \nabla j = 2,\ldots,N; l=1,\ldots L \quad p=1,\ldots,P \quad (6)$$

$$Y_{1jp} = \sum_{l=1}^{L} Y_{1jlp} \qquad \nabla j = 2,\ldots,N; p=1,\ldots,P \quad (7)$$

$$Y_{ijp} = \left(Y_{ip} - q_i\right)\sum_{l=1}^{L} X_{ijlp} \quad \nabla i = 2,...,N; j = 1,...N, j \neq i \quad p = 1,...,P \qquad (8)$$

$$Y_{jp} = \sum_{\substack{i=1 \\ i \neq j}}^{N} Y_{ijp} \qquad \nabla j = 1,...,N; p = 1,...P \qquad (9)$$

$$\sum_{i=2}^{N}\sum_{p=1}^{P} Y_{i1p} = 0 \qquad (10)$$

$$a_i \leq t_i \leq b_i \qquad \nabla i = 2,...,N \qquad (11)$$

$$\sum_{j=2}^{N}\sum_{l=1}^{L} X_{1jlp} \leq N_p \qquad \nabla \mathrm{p} = 1,...,\mathrm{P} \qquad (12)$$

$$X_{ijlp} \in \{0,1\} \qquad i = 1,..., N; j=2,..., N; l=1, ..., L; p=1,..., P \qquad (13)$$

$$Y_{ijp}, t_j, Y_{jp} \geq 0 \qquad i = 1,..., N; j=2,..., N; l=1, ..., L; p=1,..., P \qquad (14)$$

$$Y_{1jlp} \geq 0 \qquad j=2,..., N, l=1, ..., L, p=1,..., P \qquad (15)$$

This objective function (1) has four terms. The first term represents the total cost on hiring the vehicles. The second term stands for vehicle movement cost in visiting various nodes and the third term represents cost of the deliverymen. The last term is the cost on movement of goods that is assumed to depend upon the distance and the weight of the items being carried on the vehicle. Constraint (2) ensures that every node is visited by only one vehicle. Constraint (3) is to take care of the conditionality that a vehicle must leave a node and go to some other node in the same mode after it has been visited by the vehicle. It basically takes care of flow conservation meaning that a vehicle arriving at a node has to leave it definitely. Constraint (4) not only relates X_{ijlp} but also helps to determine vehicle arriving time at a node. Constraint (5) helps to determine arriving time of vehicles at nodes that are visited by the vehicles just after leaving the depot. Constraint (6) determines the available capacity in weight terms with which a vehicle leaves the depot. It also ensures that a vehicle leaving the depot should not have available capacity more than the capacity of the vehicle minus weight of the deliverymen assigned to the vehicle. Constraint (7) relates Y_{1jlp} with Y_{ijp} which is the total quantity moving to node j from the depot. Constraint (8) helps to determine the quantity in vehicle with which it moves from node i to node j after meeting the demand of node i. Constraint (9) determines quantity with which vehicle type p reaches node j and it at the same time relates Y_{jp} with Y_{ijp}. Constraint (10) meets the natural expectation of reaching back of the vehicles to the depot totally empty after meeting the demand of all the related nodes/retailers in the route. Constraint (11) ensures that service begins at the retailers in their specified time windows. Constraint (12) describes the limitation on the usage of vehicles of various types. Constraints (13) to (15) define the nature of decision variables involved.

Objective function, as expressed by equation (1), can be rewritten as stated below if the vehicle travel cost and goods movement cost also depends on vehicle type used.

Minimize

Minimize

$$\sum_{p=1}^{P}\sum_{j=2}^{N}\sum_{l=1}^{L} C_p X_{1jlp} + \sum_{p=1}^{P}\sum_{i=1}^{N}\sum_{\substack{j=1 \\ j \neq i}}^{N}\sum_{l=1}^{L} C_{dp} d_{ij} X_{ijlp} + C_l \sum_{p=1}^{P}\sum_{j=2}^{N}\sum_{l=1}^{L} l X_{1jlp} + \sum_{p=1}^{P}\sum_{i=1}^{N}\sum_{\substack{j=1 \\ J \neq i}}^{N} C_{mp} d_{ij} Y_{ijp} \qquad (16)$$

where

C_{dp} = unit distance travel cost for empty vehicle type p and
C_{mp} = unit distance and unit weight travel cost for vehicle type p in carrying goods.

IV. ILLUSTRATION AND VALIDATION OF THE PROPOSED MODEL

In this section, the model has been used to solve an illustrative example primarily to depict its use. Effects of change in the values of problem parameters are analysed for the purpose of validation of the model. This is dealt in the following subsections.

A. An illustrative example

An illustrative example is taken with the data as given in Tables 1 to 4. In this problem, three types of vehicles of different capacities have been taken. Here goods movement cost is taken as constant and the same can be noted from Table 4. The problem was solved using a mathematical programming software LINGO using formulation described by (1) to (15). Resulted optimal routes have been shown in Figure 3.

Table 1: Demand and time window data

	Nodes						
	1	2	3	4	5	6	7
Demand	0	3000	2500	2500	1400	1500	2000
Earliest time	0	0	0	0	0	0	0
Latest time	20	20	20	20	20	20	20

Table 2: Node to node distance

		Nodes						
		1	**2**	**3**	**4**	**5**	**6**	**7**
	1	0	6.3	6.1	4.9	3.1	1.9	5.6
	2	6.3	0	10.5	5.5	3.5	5.6	11.3
	3	6.1	10.5	0	5.7	8.5	5.4	2.7
Nodes	**4**	4.9	5.5	5.7	0	5	3	7.3
	5	3.1	3.5	8.5	5	0	3.3	8.5
	6	1.9	5.6	5.4	3	3.3	0	5.7
	7	5.6	11.3	2.7	7.3	8.5	5.7	0

Table 3: Service time requirement of nodes

		Number of deliverymen		
		1	**2**	**3**
	1	0	0	0
	2	0.36	0.30	0.27
	3	0.40	0.35	0.28
Node	**4**	0.36	0.30	0.27
	5	0.36	0.30	0.27
	6	0.40	0.35	0.28
	7	0.38	0.32	0.29

Table 4: Data related to vehicles

	Vehicle Type		
	1	**2**	**3**
Cost on vehicle hiring	1500	1400	1300
Cost on travelling unit distance by vehicle type *p* without load	10	10	10
Cost on carrying unit weight by unit distance by vehicle type *p*	0.04	0.04	0.04
Capacity of vehicle type *p*	9000	7000	4600
Number of vehicles	3	4	3

Formations of the routes from the depot to various nodes and other relevant information are as follow:

1. Vehicle type 2 travels from the depot to the node 5 with one deliveryman and goes further to nodes 2 and 4 in sequence before returning back to the depot.
2. Vehicle type 3 moves from the depot to node 6 and then to nodes 3 and 7 in order before returning back to the depot.
3. All of the nodes are visited during their specified time windows.
4. The demand of each node is fulfilled.

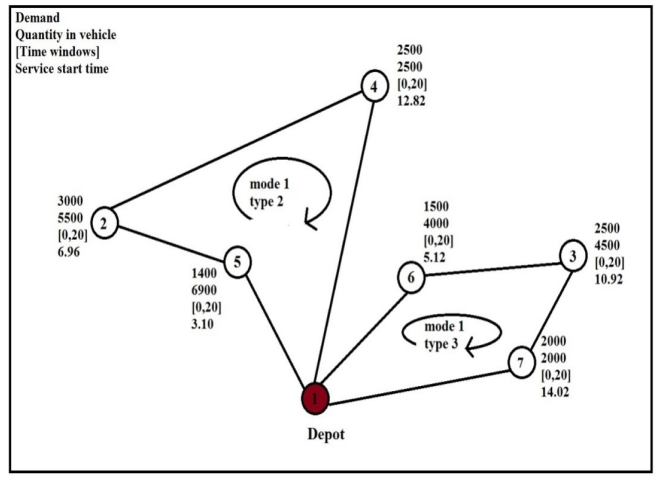

Fig. 3. Optimal solution for the example problem (vehicle movement being the same for each vehicle type)

The resultant cost is shown in Table 5.

Table 5: Resultant cost values for the illustrative example

Cost Element	Value
Vehicle hiring cost	2,700 units (two vehicles, one each of types 2 and 3 are used)
Vehicle movement	326 units
Cost on deliverymen	1,000 units (2 deliverymen are used, one deliveryman in each
Cost in carrying	3819.6
Overall cost	7,845.60 units

B. Face Validation of the formulation

1) Effect of goods carrying cost

Goods carrying cost plays a significant role in optimally determining the vehicle types to be used for the delivery process. Since vehicle with highest capacity generally has less goods carrying cost as compared to the vehicle with lower capacity. As a result, the optimal solution may be more prone to use vehicle with higher capacity instead of vehicle with lower capacity. Although the vehicle hiring cost will be more for vehicle with higher capacity, but the cost per unit capacity may be generally less. So in the use of such a high capacity vehicle, the overall cost may reduce due to lower goods carrying cost. This feature of the model is explained with the help of the example problem given in Section 4.1 with modified goods carrying cost given in Table 6. Solving this problem again, optimal vehicle routing solution is obtained and is as shown in Figure 4. In this case, vehicle type 1 is preferred in both of the routes instead of vehicle types 2

and 3 that were preferred in earlier case as shown in Figure 3. Resultant cost for the optimal distribution is as shown in Table 7. The following, as expected, can be observed from Figure 4 and Table 7:

- Vehicle hiring cost has increased due to the use of higher capacity vehicles instead of using lower capacity vehicles as was seen in Section 3.1.
- Vehicle movement cost decreased by 12 units due to the reduction in overall distance traversed.
- Even though the vehicle hiring cost goes up, the goods carrying cost decreases significantly due to lower goods carrying cost of the vehicle with higher capacity.
- Cost on deliverymen remains the same as 2 deliverymen are still used.
- Overall cost has come down to 4704.84 units from 7845.60 units due to the selection of optimal mix of vehicle types for the use.

Table 6: Modified data for goods carrying cost.

	Vehicle Type		
	1	2	3
Cost on carrying unit weight by unit distance by vehicle type *p*	0.004	0.009	0.02

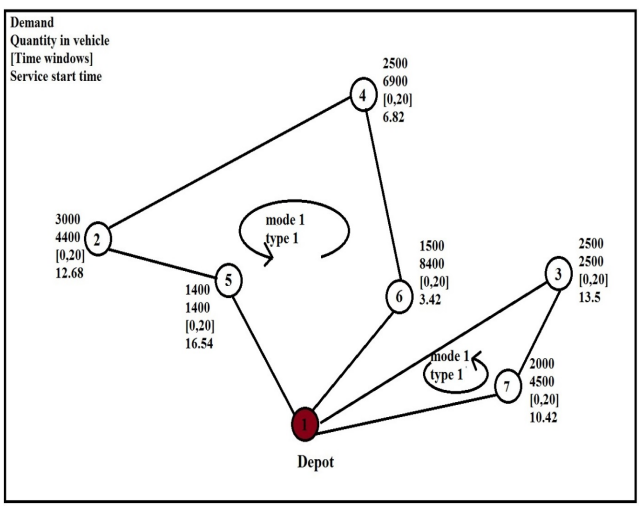

Fig. 4. Optimal solution for the example problem (vehicle movement cost varying with the type)

Table 7: Resultant cost for varying goods carrying cost

Cost Element	Value
Vehicle Hiring Cost	3,000 units (two vehicles of type 2 are used)
Vehicle Movement cost	314 units
Cost on deliverymen	1,000 units (2 deliverymen are used, one deliveryman in each route)
Cost in carrying goods	390.84 units
Overall cost	4,704.84 units

2) Effect of tightened time window

It is simple and straight to visualize that the tightening of the time window will generally require more number of vehicles for the optimal distribution planning. This feature of the model is explained with the help of the example given in Section 3.2 with further tightened time window data given in Table 8. Solving this problem again, optimal vehicle routing solution is obtained and is as shown in Figure 5. In this case, three vehicles each of type 3 are preferred instead one number each of vehicle types 2 and 3 that were preferred in earlier case as shown in Figure 3. Resultant cost for the optimal distribution is as shown in Table 9. The following is observed:

- Vehicle hiring costs increased because more vehicles are used.
- Vehicle movement cost increased by 45 units due to change in the formation of the routes.
- Even though the vehicle hiring cost goes up, the cost related to goods movement decreases due to less distance covered.
- Costs on deliverymen increases because 3 deliverymen are used now.
- Overall cost has increased to 8618.60 units from 7845.60 units.

Table 8: Tightened time window data

	Nodes						
	1	2	3	4	5	6	7
EARLIEST ARRIVAL TIME	0	4	6	1	3	2	3
LATEST ARRIVAL TIME	20	9	15	7	7	8	7

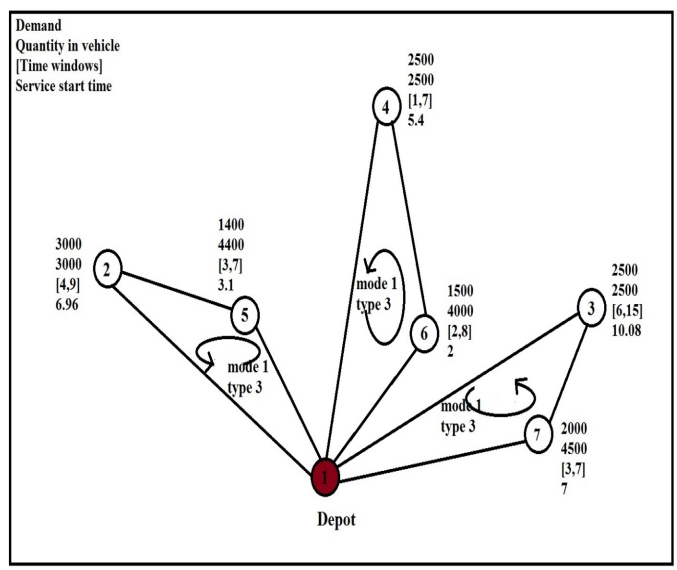

Fig. 5. Optimal solution with tightened time window

Table 9: Resultant cost for the tightened time window case

Cost Element	Value
Vehicle hiring cost	3,900 units (three vehicles of type 3 are used)
Vehicle movement cost	371 units
Cost on deliverymen	1,500 units (3 deliverymen are used, one deliveryman for each vehicle)
Cost in carrying goods	2847.60 units
Overall cost	8618.60 units

3) Effect of number of vehicle of a type

In the solution of the problem described in Section 4.2.2, three vehicles of type 3 were used in the optimal solution. In case the availability of vehicle type 3 is restricted, the optimal solution will try to find out a solution making use of other vehicle type. To depict this concept, the problem of Section 4.2.2 is once again solved $N_3 = 2$ (Table 10). The optimal solution is shown in Figure 6 with the routing cost as shown in Table 11. From Figure 6, it is obvious that now only one vehicle of type 2 is used because of the availability of only two vehicles of type 3. The optimum solution obtained in this case is naturally absorbing more of costs (Table 11) because of tightened restriction on availability on most useful vehicle type 3.

Table 10: Modified data related to vehicles

	Vehicle Type		
	1	2	3
Numbers of vehicles	3	4	2

Table 11: Resultant cost values for the problem

Cost Element	Value
Vehicle hiring cost	4,000 units (three vehicles of type 3 are used)
Vehicle movement cost	371 units
Cost on deliverymen	1,500 units (3 deliverymen are used, one deliveryman for each vehicle)
Cost in carrying goods	2847.60 units
Overall cost	8718.6 units

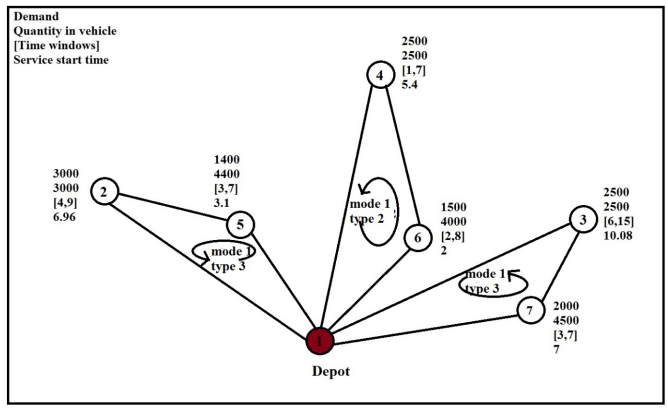

Fig. 6. Optimal solution with tightened time window and with restriction on number of a vehicle type

C. Vehicle mix determination problem

All the example problems, solved earlier, assume the available number of vehicles of each type as totally known. VRP will have to do vehicle planning under this framework itself. It supposedly assumed that, if desired, one cannot make use of more numbers of vehicle type than what is available. This kind of framework assumes that the vehicle routing planner goes to the market to find out the availability of various vehicle types even without knowing its own requirements corresponding to least optimal costs.

A pragmatic and judicious approach will desire and require that the planner should find out vehicle requirement first before going even to find out the availability of various vehicle types in terms of their numbers. This requirement of the problem can be easily handled by the proposed model, presented in section 3, by treating N_p as a variable in (12). Thus the same model can also be used for determining optimum vehicle mix. While taking N_1, N_2, and N_3 as decision variables, the problem of Section 4.2.3 is once again solved. The solution obtained is the one as shown in Figure 5. Here the model dictates the use of three vehicle of type 3 while rejecting the use of other vehicle types. In case planning is done under constrained availability of the vehicle, as was for vehicle type 3 described in Section 4.2.4, a different vehicle mix was dictated with much higher cost. Thus it can be seen that the formulation is in a position to find out optimal mix of vehicle with lesser cost.

D. Homogeneous vs Heterogeneous Fleet

The formulation given in section 3 is basically for heterogeneous fleet. In case p is taken as 1, the following can very well describe the VRP considered by Pureza (2012).

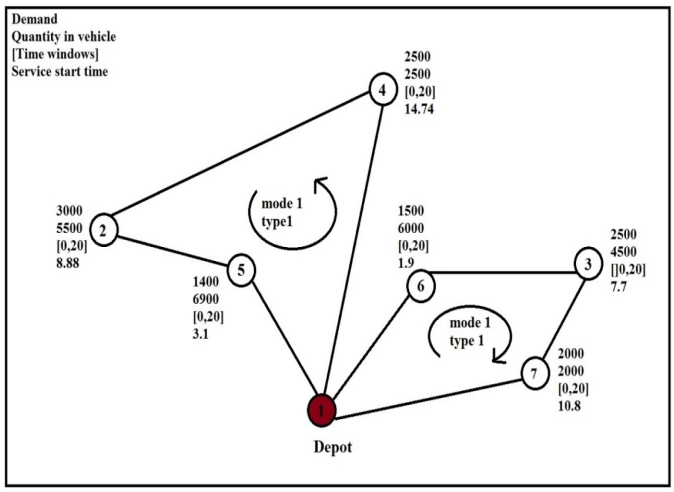

Fig. 7. Optimal solution for the case of homogeneous fleet using vehicle type 1

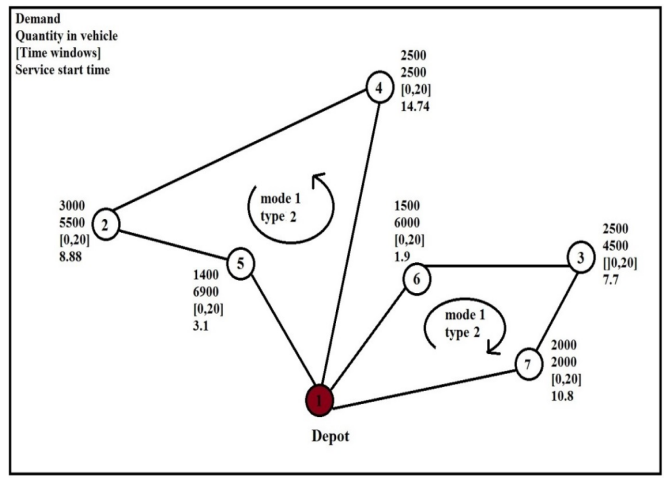

Fig. 8. Optimal solution for the case of homogeneous fleet using vehicle type 2

Table 12: Resultant cost values in use of vehicle type 1

Cost Element	Value
Vehicle hiring cost	3,000 units (two vehicles of type 1 are used)
Vehicle movement cost	326 units
Cost on deliverymen	1,000 units (2 deliverymen are used, one deliveryman for each vehicle)
Cost in carrying goods	3,819.60 units
Overall cost	8,145.60units

In this section, efforts have been made to demonstrate the economic advantage to be achieved from the use of heterogeneous fleet illustrative example of section 4.1. This problem is solved taking availability of vehicle type 1 only, and so of type 2 or type 3 at a time. The respective optimal VRP solutions are shown in Figures 7, 8 and 9 respectively. Respective VRP routing costs are as shown in Tables 12, 13 and 14. From these tables, it can easily be noticed that the costs for the case of homogeneous fleet is much higher as compared to the case of heterogeneous fleet with overall cost of 7845.60 as shown in Table 5.

Table 13: Resultant cost values in use of vehicle type 2

Cost Element	Value
Vehicle hiring cost	2,800 units (2 vehicles of type 2 are used)
Vehicle movement cost	326 units
Cost on deliverymen	1,000 units (2 deliverymen are used, one deliveryman for each vehicle)
Cost in carrying goods	3,819.60 units
Overall cost	7,945.60units

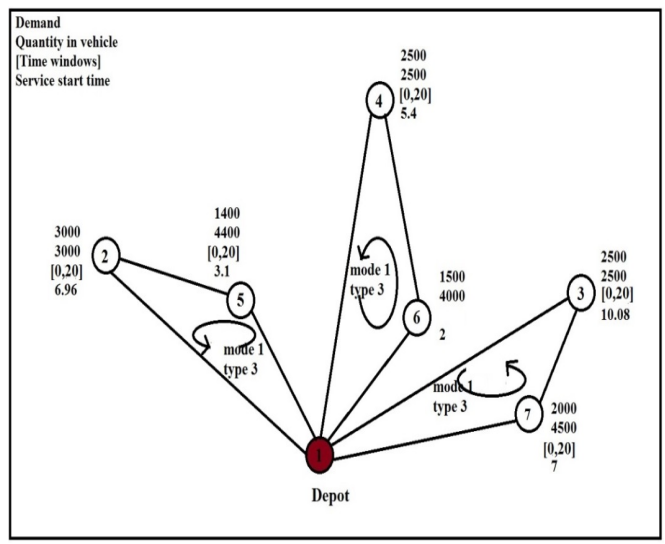

Fig. 9. Optimal solution for the case of homogeneous fleet using vehicle type 3

Table 14: Resultant cost values in use of vehicle type 3

Cost Element	Value
Vehicle hiring cost	3,900 units (3 vehicles of type 3 are used)
Vehicle movement cost	371 units
Cost on deliverymen	1,500 units (2 deliverymen are used, one deliveryman for each vehicle)
Cost in carrying goods	2,847.60 units
Overall cost	8,618.60 units

V. CONCLUSIONS

In the present work, vehicle routing problem with heterogeneous fleet was formulated as a mathematical model for a situation where vehicles are required to reach the destinations during specified time window (VRPTW). The interesting part is the consideration of usage of the capacity of vehicles after accountinf for the weight of deliverymen to be assigned to the vehicles. The advantage of using heterogeneous fleet is that vehicles can be efficiently used by identifying right combination of vehicle capacity, vehicles hiring cost, vehicles moving cost and cost of carrying goods. Studied effects of these parameters and other important findings are as presented below:

- Efficient use of the capacity of the vehicles results in an optimal distribution plan with lower distribution cost.
- Use of number of vehicles or number of routes depends upon the size of the time window of the nodes during which delivery has to be made. If the time window is tightened, number of routes may tend to increase. Similarly, less number of routes may be opted if the time window is relaxed.
- It is natural to find the vehicles with more capacity absorbing lesser cost on carrying goods. The analysis carried out shows the optimal distribution planning favoring the vehicle with higher capacity and lowest cost on carrying goods as far as is possible.
- The model is able to find out the optimal vehicle-mix and the numbers thereof in minimising the distribution cost.
- Heterogeneous vehicle fleet is more realistic and it represents generalized situation. It is found that heterogeneous vehicles are preferred in place of homogeneous ones in minimising the distribution cost.

.

REFERENCES

[1] **Drew S.A.W., and Smith P.A.C.,** (1995). The new logistic management: transformation through organizational learning. Logistic Information Management, 8(1), 24-33.

[2] Chakroborty, **P. and Dwivedi, T.,** (2002). Optimal route network design for transit systems using genetic algorithms. Engineering Optimization, Vol. 34, 83-100.

[3] **Malandraki C.,** 1989. Time dependent vehicle routing problems: Formulations, Solution Algorithms and Computational Experiments (Unpublished Doctoral Dissertation), North-Western University, NY.

[4] **Malandraki C. and M.S. Daskin.,** (1992).Time dependent vehicle routing problems: Formulations, properties and heuristic algorithms. Transportation science, 26(3), 185—200.

[5] **Hill A.V. and W.C. Benton.,** Modeling intracity time-dependent travel speeds for vehicle scheduling problems. European Journal of Operational Research, 43(4):343—351, 1992.

[6] **Malandraki C. and R.B. Dial**, (1996). A restricted dynamic programming heuristic algorithm for the time dependent traveling salesman problem. European Journal of Operational Research, 90, 45—55.

[7] **Azi, N.** 2010. Méthodes exactes et heuristiques pour le probléme de tournées avec fenétres de temps et réutilisation de véhicules. Ph.D. thesis, Université de Montréal

[8] **Damon Gulczynski, Bruce Golden, and Edward Wasil**, (2011). The multi-depot split delivery vehicle routing problem: An integer programming-based heuristic, new test problems, and computational results Computers and Industrial Engineering. 61(3)

[9] **Pureza, V., Morabito, R., and Reimann M.,** (2012).Vehicle routing with multiple deliverymen: Modeling and heuristic approaches for the VRPTW. European Journal of Operational Research, 218, 636–647.

BIOGRAPHY

Dr. A K Agrawal is full professor at Mechanical Engineering Department, Institute of Technology, Banaras Hindu University, Varanasi, UP, India. He obtained his undergraduate degree in Mechanical Engineering program from MNNIT, Allahabad, and masters and doctorate from IIT, Kanpur. His research interests are in the field of Operations Research, Supply Chain Management, Design of Production System, Cellular Manufacturing Systems etc. He has served as the Divisional Head of Six Sigma Cell of a large steel

industry. He has guided several M. Tech. and three Ph.D. theses.

Dr. P Bhardwaj has been working in Mechanical Engineering Department, Institute of Technology, Banaras Hindu University, Varanasi, UP, India since 2002. He completed B Tech and M Tech from Agra and Ph.D. from IT, Banaras Hindu University, {Currently IIT (BHU)} Varanasi. His research area includes Supply Chain Management, Design of Production System, Cellular Manufacturing Systems etc. He has guided several M. Tech. Dissertations and right now, supervising two Ph.D. students for their Ph.D.