Grid-Connected and Islanding Fault Diagnosis in Microgrid Using Deep Learning Technique

M. M. Hossain
Department of Engineering Technologies
Bowling Green State University, Bowling Green, Ohio 43403, USA
hossam@bgsu.edu and motaher_eee@pust.ac.bd

Abstract

Fault detection and classification in microgrid becomes a steep challenging issue due to its inherent characteristics, such as operating in both grid-connected and islanded modes, the intermittent nature of distribution generations, and the variation of fault current magnitudes. The microgird often experiences a symmetrical fault and three types of unsymmetrical faults due to the natural causes such as heavy wind, lightning, aging of cables and/or poles, and others. Therefore, an accurate and precise fault diagnosis model is needed for proper and smooth operation of the microgrid. In this paper, a deep learning model based on Long Short-Term Memory is addressed for microgrid faults diagnosis. The Matlab/Simulink environment is used for both microgrid model implementation and faults simulation. The model is implemented based on modified IEEE 13 Node Test Feeder. The faults are simulated on a distribution line of the microgrid starting from the relay location for collecting the training and testing datasets which include ten different shunt faults. The proposed deep learning model can successfully identify faults in 1/4 cycle data window of three-phase voltages and currents for both modes of operation. The average testing classification accuracy and precision of the proposed model are 99.89 % and 0.9934 when the microgrid is operated in grid-connected mode and the average classification accuracy and precision are 99.88 % and 0.9930 for the islanded mode of operation.

Key words
Microgrid, fault detection and classification, deep learning, Long Short-Term Memory.

1. Introduction
The global average temperature is increasing due to the uncontrolled CO_2 emissions which mostly come from fossil fuel based energy systems. Without imposing any energy policy, the international energy agency forecasts a 6 °C increase of the world average temperature by 2050 due to an increase of 70% in oil consumption which leads the direct CO_2 emissions of 130% (Hajiaghasi et al. 2019). To overcome these issues, the Renewable Energy Sources (RESs) can be played a vital role (Baloch and Muhammad, 2021). The RESs have been widely become popular options to generate the energy demands for various developed (Popkova & Sergi, 2021) and developing countries (Armin et al. 2020; Balakrishnan et al. 2020; Habib, Rahman, & Hossain, 2014). The microgrid (MG) concept is extensively used in different sectors including industries, residential areas, commercial areas, and etc (Marahatta et al. 2021).

The microgrid (MG) concept is extensively used in different sectors including industries, residential areas, commercial areas, and etc (Marahatta et al. 2021). A MG can be defined as a cluster of distributed energy resources (DERs) which include RESs, battery storage systems, and loads which run as a single controllable unit (Wang and Lu 2020). It can be operated both in grid-connected and islanded modes depending on purpose. Its operating voltages are typically varied 400 V to 69 kV. It can be found in both kW to MW size (Farrokhabadi et al. 2020). During grid-connected mode, MG can exchange electricity with the main grid. On the other hand, in islanded mode, the electricity generation only depends on the DERs. The dynamic nature of MG operation raises several problems which give a very high fault currents in islanded operating mode compare to fault current that occurred in grid-connected mode (Cepeda et al. 2020; Patnaik et al. 2020). On the other hand, the penetration of the RESs also creates various issues to the fossil fuel based distribution systems because of the intermittent nature of RESs (Semshchikov et al. 2020).

Recently, the machine learning algorithms have been used in MG fault detection schemes due to their adaptability, reliability, robustness, and resilient (Rahman et al. 2020). Most commonly used algorithms for MG faults prognosis and diagnostic are support vector machines (SVM), k-nearest neighbors (k-NN), decision trees, random forest,

Bayesian classifier, artificial neural network (ANN), recurrent neural Network (RNN), feed-forward deep network, deep belief network, deep neural networks, and convolution neural network (CNN) (Baloch and Muhammad 2021; Bukhari et al. 2020; Chandrasekaran et al. 2020; Grcić et al. 2021; A. Srivastava and Parida 2020; Wu and Wang 2021). There remains some research gap due to the addressed problems of the MG protection. Therefore, a unique protection scheme is required to operate MG in both modes of operation to protect the distribution line and other equipments from the high fault currents.

In this paper, the MG comprise of solar photovoltaic (PV), solid oxide fuel cell, wind turbine generator, and diesel generator unit is modeled in Matlab/Simulink (R2020a) environment based on IEEE 13 Node Test Feeder (Kersting 1991). The faults are simulated on a distribution line of the microgrid starting from the relay location for collecting the train and test datasets which include ten different faults and no fault data. A deep learning based Long Short-Term Memory (LSTM) model is implemented to classify and detect various fault cases. The model is trained with the train datasets, later on; it is also tested with test datasets for performance evaluation.

2. Proposed Microgrid Model

The distribution grid often experiences various fault conditions due to the natural causes such as heavy wind, lightning, aging of cables and/or poles, and others (Hare et al. 2016; C. Zhang et al. 2020). These faults include both symmetrical and unsymmetrical faults which are also known as shunt faults (M. Srivastava et al. 2020). The symmetrical fault includes three phase-to-ground fault and the unsymmetrical faults comprise of single phase-to-ground, double phase-to-ground, and phase-to-phase fault (Rahman et al. 2020). The MG used in the simulation is shown in Figure 3. The MG model is implemented on a modified IEEE 13 Node Test Feeder which operates at 4160 V and some other characteristics can be found in (Kersting 1991). A total of 3.58 MVA load are connected to different location of the distribution line. A 250 KW, 250 V of solar PV model, 3125 KW, 2.4 kV of diesel generator model, 1500 KW, 575 kV of diesel wind turbine generator model, and 50 KW, 400 V of SOFC model implemented by Matlab/Mathworks (Mathworks 2021) are connected to the MG distribution system. Three-phase step-up transformers for each individual RESs are connected to the MG system to match the grid voltage of 4160 V. The faults are created at the relay location shown in Figure 1.

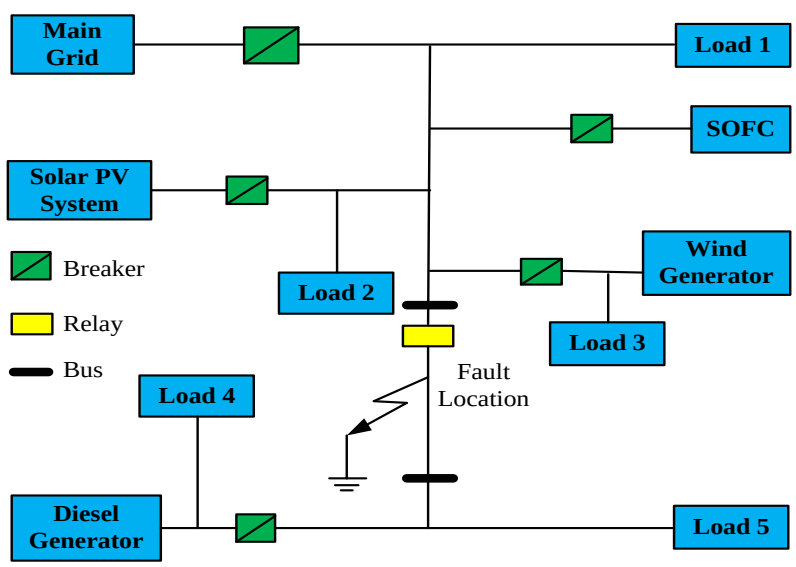

Figure 1. IEEE 13 Node Test Feeder based proposed microgrid.

3. LSTM Methods and Proposed Model

In this section, the deep learning based LSTM model is presented. A LSTM model comprises of four gates called cell unit, input gate, output gate, and forget gate which is shown in Figure 2 (S. Zhang et al. 2018). The principle behind

an LSTM is to remember previous information that are already engaged with the network and forget the irrelevant information from the network (S. Zhang et al. 2018).

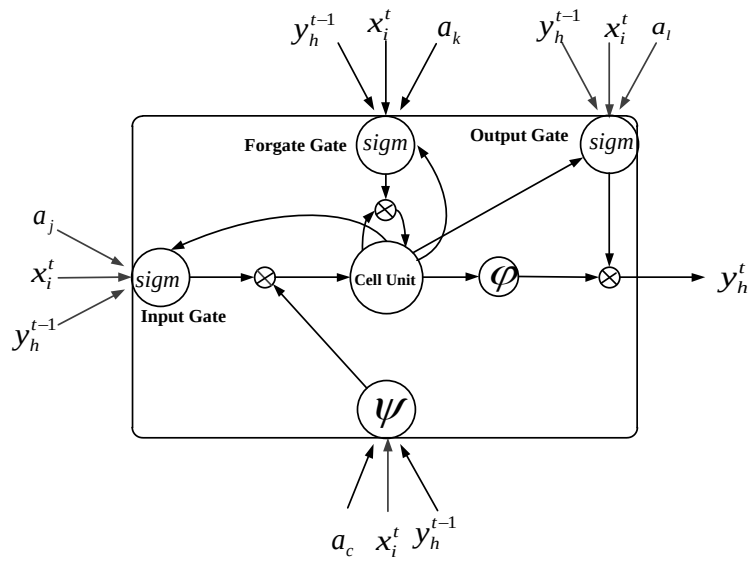

Figure 2. The basic structure of a LSTM cell (Hossain and Kolla 2020).

The mathematical presentation of the LSTM can be written from Figure 2 and its details can be found in (S. Zhang et al. 2018),

$$p_j^t = \sum_{i=1}^{I} w_{ij} x_i^t + \sum_{h=1}^{H} w_{hj} y_h^{t-1} + \sum_{c=1}^{C} w_{cj} n_c^{t-1} + a_j$$

$$y_j^t = \mathrm{sigm}(p_j^t)$$

$$\mathbf{p_k^t = \sum_{i=1}^{I} w_{ik} x_i^t + \sum_{h=1}^{H} w_{hk} y_h^{t-1} + \sum_{c=1}^{C} w_{ck} n_c^{t-1} + a_k}$$

$$\mathbf{y_k^t = sigm(p_k^t)}$$

$$\mathbf{p_c^t = \psi(\sum_{i=1}^{I} w_{ic} x_i^t + \sum_{h=1}^{H} w_{hc} y_h^{t-1} + a_c)\ r_c^t = y_k^t n_c^{t-1} + y_j^t p_c^t}$$

$$\mathbf{p_l^t = \sum_{i=1}^{I} w_{il} x_i^t + \sum_{h=1}^{H} w_{hl} y_h^{t-1} + \sum_{c=1}^{C} w_{cl} n_c^{t-1} + a_l}$$

$$\mathbf{n_l^t = sigm(p_l^t)}$$

$$\mathbf{y_h^t = y_l^t \varphi(r_c^t)}$$

where j, k, l, and c denote the vector number of the input gate, the forget gate, the output gate, and the cell unit, respectively. The quantities n and d denote the input from cell to a corresponding gate and the value of the cell. The activation functions are represented by $\boldsymbol{sigm}$, $\boldsymbol{\psi}$, and $\boldsymbol{\varphi}$.

A basic architecture of the proposed deep learning based LSTM model is illustrated in Figure 3. The LSTM model is implemented in Matlab/Deep Learning Toolbox (R2020a) (Mathworks 2021) consisting of a sequencer layer, LSTM layers, fully connected layer, softmax layer, and classification layer. The hyperparameters used are the cross-entropy loss function for softmax classifier, Adam optimizer in loss functions, epochs of 2, learning drop rate of 0.1, learning rate of 0.001, gradient threshold of 1, and mini-batch size of 150.

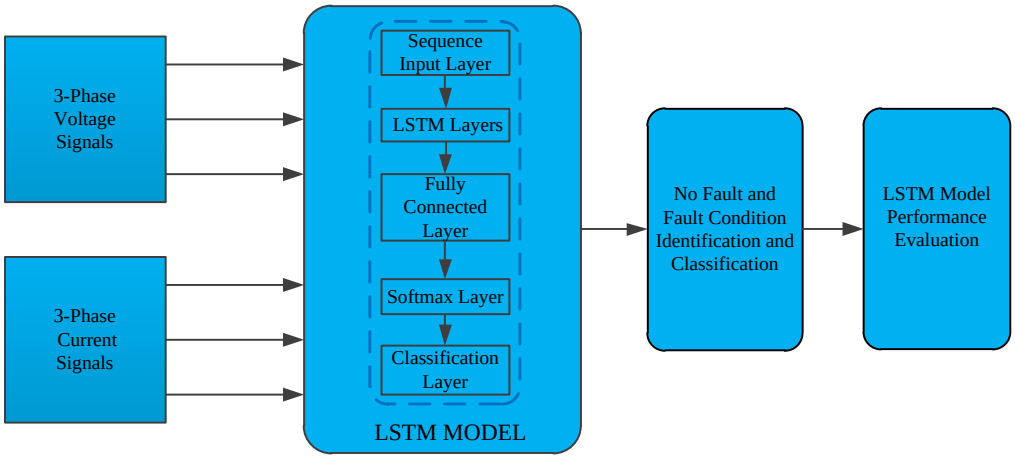

Figure 3. The proposed architecture of the LSTM model.

4. Data Collection

The datasets for training and testing are collected when the faults are simulated on the MG system at the rate of 72 samples per cycle. For preparing each fault dataset, the quarter cycle (1/4) data window containing 18 samples is considered for each no fault (NF) and fault condition. About one cycle data is considered as NF and the remaining is accounted for fault data.

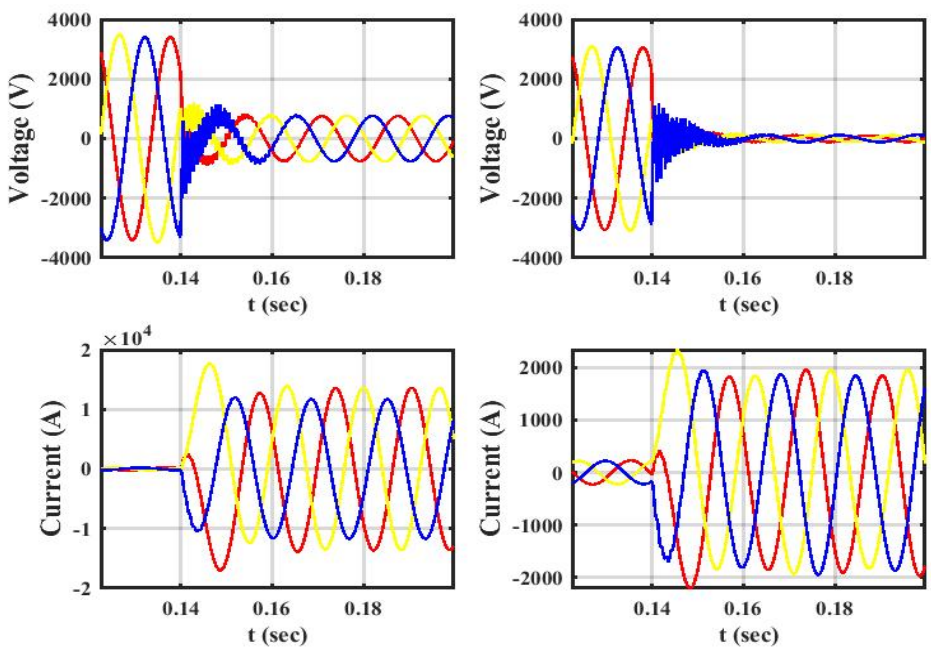

Figure 4. Simulated ABCG fault signal for grid-connected (right) and islanded mode (left).

The faults are simulated at the relay location and the location changes with increment of 10% distance from the starting position which provides ten different fault locations for each training dataset. Test dataset are only obtained at 75% distance from the relay location for each fault case. The three-phase-to-ground fault is categorized as ABCG fault. The single phase-to-ground faults are categorized as AG, BG, and CG. The phase-to-phase-ground faults are categorized as ABG, BCG, and CAG. The phase-to-phase faults are categorized as AB, BC, and CA. A sample of fault voltage and current signals for ABCG fault is illustrated in Figure 4. It can be noted that faults current for each phase is considerably higher in grid-connected mode of MG operation compare to islanded mode of MG operation.

5. LSTM Model Training

The train datasets containing three phase voltage and current signals are applied to the LSTM model. The final model is achieved by tuning the hyperparameters mentioned in Section 3. The obtained accuracy and loss function curves are illustrated in Figure 5. It can be observed that the accuracy is about 100% and the loss is close to zero during training of the LSTM model.

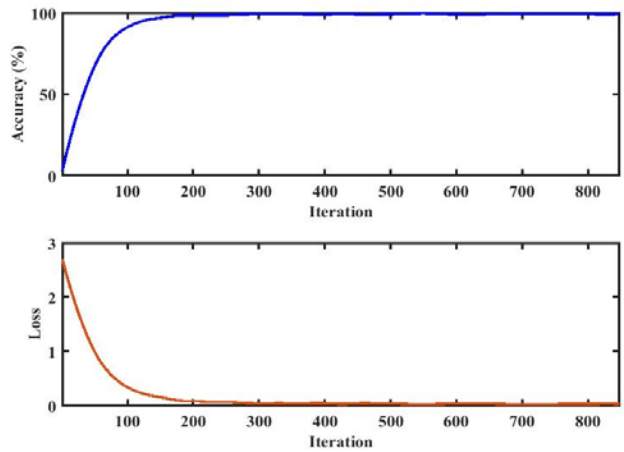

Figure 5. Accuracy and loss during training process.

The trained LSTM model is tested with the train datasets. The confusion matrix obtained during training is presented in Figure 6. From the confusion matrix, it can be seen that most of cases are correctly identified and classified. The diagonal elements of the confusion matrix are identified numbers of the NF and other fault cases.

The LSTM model's performances are evaluated using the statistical measures that are commonly used in various fields for classification and detection problem such as in fault detection, image processing, time series forecasting, and etc(Al Mamun et al. 2019; Hossain and Kolla 2020; Hossain et al. 2020; Hossain, Al Mamun et al. 2019; Mursalin at al. 2013). The accuracy can be computed from the obtained confusion matrix using the following equation.

$$Accuracy = \frac{TrP + TrN}{TrP + TrN + FlN + FlP} \times 100\%$$

where *TrP* denotes true positive, *TrN* denotes true negative, *FlP* denotes false positive, and *FlN* denotes false negative value. The precision is another measure which is used as performance measure and can be written as as below.

$$Precision = \frac{TrP}{TrP + FlP}$$

The accuracy and precision obtained is presented in Table 1 when the LSTM model is tested with train dataset. It can be seen that the highest classification is observed for NF case. The precision is 1 for NF, CG, and ABCG cases. The lowest classification accuracy and precision is obtained for BCG and BC case, respectively.

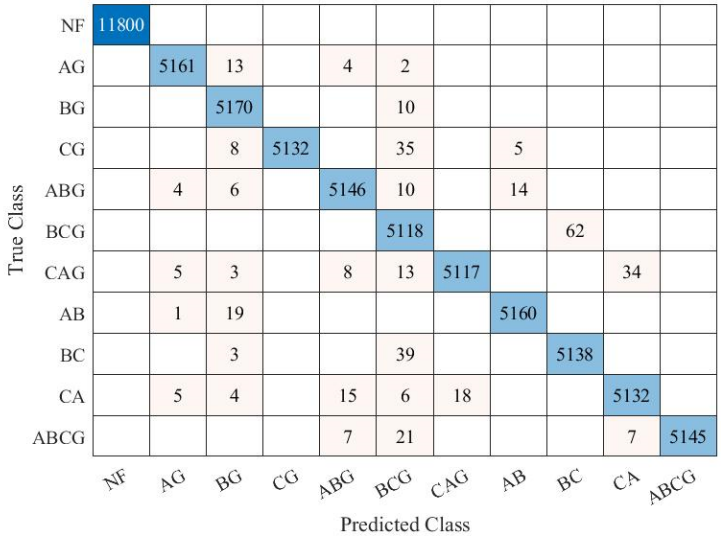

Figure 6. Confusion matrix when the LSTM model is tested with train dataset.

6. Results and Discussion

The trained model is tested with test dataset obtained in both grid-connected and islanded mode of MG operation. The test dataset are not used during the LSTM model development. Figure 7 depicts the confusion matrix when the trained deep learning based LSTM model is tested with test dataset obtained at grid-connected mode of MG operation. It is identified that most of cases are classified expect a very few misclassification found for each fault cases. The NF cases are classified and identified with maximum accuracy and precision.

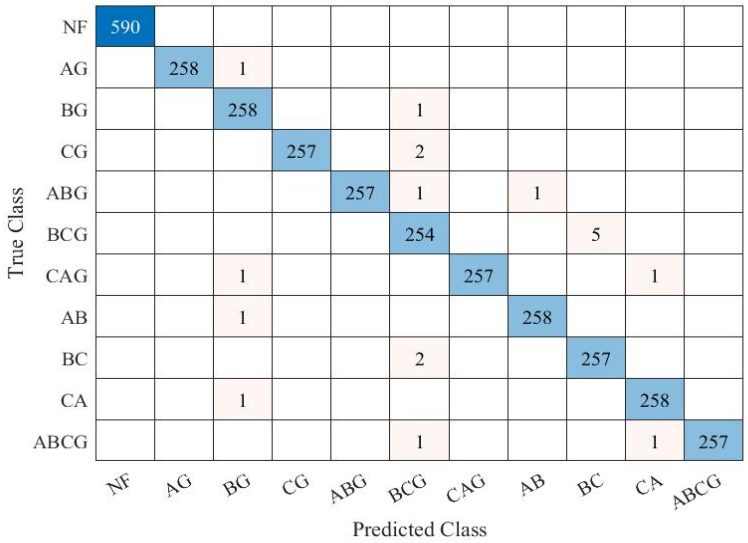

Figure 7. Confusion matrix when the model is tested with test dataset obtained at grid-connected mode.

Figure 8 illustrated the confusion matrix when the trained LSTM model is tested with test dataset obtained at islanded mode of MG operation. It is noted that all the NF cases are correctly identified whereas a very few misclassification is found for each fault cases.

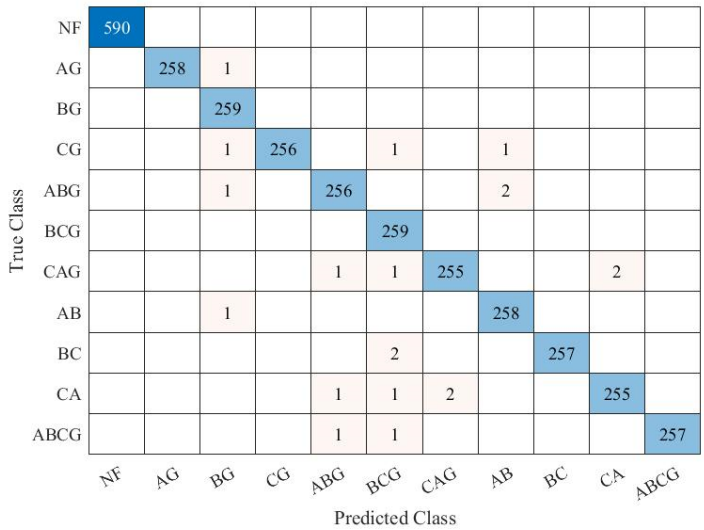

Figure 8. Confusion matrix when the model is tested with test dataset obtained at islanded mode.

The test performance measures are mentioned in Table 1. For both modes of MG operation, the NF cases are correctly identified and classified. The average classification accuracy is 99.89% for grid-connected mode and 99.88% for islanded mode of MG operation. The obtained average precision for grid-connected mode is 0.9934 and for islanded mode is 0.9930.

Table 1. Training and Testing performance of LSTM model.

Condition	**Training**		**Testing**			
			Grid-Connected Mode		**Islanded Mode**	
	Accuracy (%)	**Precision**	**Accuracy (%)**	**Precision**	**Accuracy (%)**	**Precision**
NF	100	1	100	1	100	1
AG	99.94654088	0.997102009	99.96855346	1	99.96855346	1
BG	99.89622642	0.989284347	99.8427673	0.984733	99.87421384	0.984791
CG	99.9245283	1	99.93710692	1	99.90566038	1
ABG	99.89308176	0.993436293	99.93710692	1	99.81132075	0.988417
BCG	99.68867925	0.97411496	99.62264151	0.97318	99.81132075	0.977358
CAG	99.87264151	0.996494645	99.93710692	1	99.81132075	0.992218
AB	99.93867925	0.996331338	99.93710692	0.996139	99.87421384	0.988506
BC	99.83647799	0.988076923	99.77987421	0.980916	99.93710692	1
CA	99.86006289	0.992074232	99.90566038	0.992308	99.81132075	0.992218
ABCG	99.94496855	1	99.93710692	1	99.93710692	1

7. Conclusion

The penetration of DERs, dynamic nature of MG operation, and variation of fault currents create added difficulties for a relay to protect various shunt faults. This paper gives a detailed of the MG model implemented based of IEEE 13 Node Test Feeder. The modeled MG is simulated at various fault conditions for the train and test dataset. For faster relaying operation (Phadke and Thorp 2009), 1/4 cycle data window is considered to assign the NF and faults cases.

The deep learning model is applied for classifying and identifying ten different shunt faults. The trained LSTM scheme is tested with both train and test dataset. The proposed scheme are successful to identify and classify faults in 1/4 cycle data window of fault signal for both modes of operation. This scheme shows slightly better performance in grid-connected mode compared to islanded mode of MG operation. The NF cases are correctly identified in both modes of operation. The average testing classification accuracy is varied from 99.89 % to 99.88 % and the average precision is varied from 0.9934 to 0.9930 when comparing both modes of MG operation with this proposed LSTM scheme.

Acknowledgement

Author would like to acknowledge the ECET LAB, Department of Engineering Technologies, Bowling Green State University, Bowling Green, OH 43402, for providing Lab supports.

References

Al Mamun, A., Hossain, M. S., Hossain, M. M., and Hasan, M. G. Discretion way for bleeding detection in wireless capsule endoscopy images, *Paper presented at the 2019 1st International Conference on Advances in Science, Engineering and Robotics Technology (ICASERT)*, Dhaka, Bangladesh, May 3-5, 2019

Armin Razmjoo, A., Sumper, A., & Davarpanah, A., Energy sustainability analysis based on SDGs for developing countries, *Energy Sources, Part A: Recovery, Utilization, and Environmental Effects*, vol. 42, no. 9, pp. 1041-1056, 2020.

Balakrishnan, P., S. Shabbir, M., F. Siddiqi, A., and Wang, X., Current status and future prospects of renewable energy: A case study, *Energy Sources, Part A: Recovery, Utilization, and Environmental Effects*, vol. 42 no. 21, pp. 2698-2703, 2020.

Baloch, S., and Muhammad, M. S., An Intelligent Data Mining-Based Fault Detection and Classification Strategy for Microgrid, *IEEE Access*, vol. 9, pp. 22470-22479, 2021.

Bukhari, S. B. A., Kim, C.-H., Mehmood, K. K., Haider, R., and Zaman, M. S. U., Convolutional neural network-based intelligent protection strategy for microgrids, *IET Generation, Transmission & Distribution*, vol. 14, no. 7, pp. 1177-1185, 2020.

Cepeda, C., Orozco-Henao, C., Percybrooks, W., Pulgarín-Rivera, J. D., Montoya, O. D., Gil-González, W., and Vélez, J. C., Intelligent Fault Detection System for Microgrids, *Energies*, vol. 13, no. 5, 1223, 2020.

Chandrasekaran, K., Kandasamy, P., and Ramanathan, S., Deep learning and reinforcement learning approach on microgrid, *International transactions on electrical energy systems*, vol. 30, no. 10, e12531, 2020.

Farrokhabadi, M., Cañizares, C. A., Simpson-Porco, J. W., Nasr, E., Fan, L., Mendoza-Araya, P. A., and Reilly, J., Microgrid Stability Definitions, Analysis, and Examples, *IEEE Transactions on Power Systems*, vol. 35, no. 1, pp. 13-29, 2020.

Grcić, I., Pandžić, H., and Novosel, D., Fault Detection in DC Microgrids Using Short-Time Fourier Transform, *Energies*, vol. 14, no. 2, 2021.

Habib, M. A., Rahman, M. M., and Hossain, M. M., Prospects of Wind Energy at Sitakunda and a Proposal for Hybrid Power System for Remote Areas, *Global Journal of Research In Engineering*, vol. 14, no. 4-F,2014.

Hajiaghasi, S., Salemnia, A., and Hamzeh, M., Hybrid energy storage system for microgrids applications: A review, *Journal of Energy Storage*, vol. 21, pp. 543-570, 2019.

Hare, J., Shi, X., Gupta, S., and Bazzi, A., Fault diagnostics in smart micro-grids: A survey, *Renewable and Sustainable Energy Reviews*, vol. 60, pp. 1114-1124, 2016.

Hossain, M. M., & Kolla, S. R., Application of Long Short-Term Memory for Faults Identification in 3-Phase Induction Motor, *IJIREEICE*, vol. 8, no. 9, pp. 1-8, 2020.

Hossain, M. S., Al Mamun, A., Ghosh, T., Hasan, M. G., Hossain, M. M., and Tahabilder, A, Ulcer Detection in Wireless Capsule Endoscopy Using Locally Computed Features, *The International Conference on Cyber Security and Computer Science*, pp. 491-502, 2020.

Hossain, M. S., Al Mamun, A., Hasan, M. G., and Hossain, M. M., Easy scheme for ulcer detection in wireless capsule endoscopy images, *2019 1st International Conference on Advances in Science, Engineering and Robotics Technology (ICASERT)*, pp. 1-5, 2019

Kersting, W. H, Radial distribution test feeders, *IEEE Transactions on Power Systems*, vol. 6, no. 3, pp. 975-985, 1991.

Marahatta, A., Rajbhandari, Y., Shrestha, A., Singh, A., Gachhadar, A., & Thapa, A., Priority-based low voltage DC microgrid system for rural electrification, *Energy Reports*, vol. 7, pp. 43-51, 2021.

Mathworks (2020a), Deep Learning Toolbox, Available: https://www.mathworks.com/products/deep-learning.html

Mathworks (2020a), Matlab, Available: https://www.mathworks.com/

Mursalin, M., Hossain, M. M., Noman, M. K., and Azam, M. S., Performance Analysis among Different Classifier Including Naive Bayes, Support Vector Machine and C4. 5 for Automatic Weeds Classification, *Global Journal of Computer Science and Technology*, vol. 13, no. 3-F, 2013.

Patnaik, B., Mishra, M., Bansal, R. C., & Jena, R. K., AC microgrid protection – A review: Current and future prospective, *Applied Energy*, vol. 271, 115210, 2020.

Phadke, A. G. and Thorp, J. S., *Computer relaying for power systems*, second edition, John Wiley & Sons, 2009

Popkova, E. G., and Sergi, B. S., Energy efficiency in leading emerging and developed countries, *Energy*, vol. 221, 119730, 2021.

Rahman Fahim, S., Sarker, S. K., Muyeen, S., Sheikh, M., Islam, R., and Das, S. K., Microgrid fault detection and classification: Machine learning based approach, comparison, and reviews, *Energies, vol. 13, no.* 13, 3460, 2020.

Semshchikov, E., Negnevitsky, M., Hamilton, J., and Wang, X., Cost-Efficient Strategy for High Renewable Energy Penetration in Isolated Power Systems, *IEEE Transactions on Power Systems*, vol. 35, no. 5, pp. 3719-3728, 2020.

Srivastava, A., and Parida, S., Fault Isolation and Location Prediction using Support Vector Machine and Gaussian Process Regression for Meshed AC Microgrid, *The 2020 IEEE International Conference on Computing, Power and Communication Technologies (GUCON)*, October 2-4, 2020.

Srivastava, M., Goyal, S. K., Saraswat, A., and Gangil, G., Simulation Models for Different Power System Faults, *The 2020 IEEE International Conference on Advances and Developments in Electrical and Electronics Engineering (ICADEE)*, Dec. 10-11, 2020.

Wang, J., and Lu, X., Sustainable and Resilient Distribution Systems With Networked Microgrids, *Proceedings of the IEEE*, vol. 108, no. 2, pp. 238-241, 2020.

Wu, T., and Wang, J., Artificial intelligence for operation and control: The case of microgrids, *The Electricity Journal*, vol. 34, no.1, 106890, 2021.

Zhang, C., Wang, J., Huang, J., and Cao, P., Detection and classification of short-circuit faults in distribution networks based on Fortescue approach and Softmax regression, *International Journal of Electrical Power & Energy Systems*, vol. 118, 105812, 2020.

Zhang, S., Wang, Y., Liu, M., and Bao, Z., Data-Based Line Trip Fault Prediction in Power Systems Using LSTM Networks and SVM, *IEEE Access, vol. 6*, pp. 7675-7686, 2018.

Biography

M. M. Hossain received the B.Sc. degree in electrical and electronic engineering from the Rajshahi University of Engineering and Technology (RUET), Rajshahi, Bangladesh, in 2007, the M.Sc. degree in Renewable Energy from the Carl von Ossietzky Universität Oldenburg, Oldenburg, Germany in 2010. He earned another Masters degree in Engineering Technology from the Bowling Green State University, OH, USA in 2021. He has been working as an Assistant Professor (on study leave) in the Department of Electrical and Electronic Engineering at Pabna University of Science and Technology, Pabna, Bangladesh since 11 May 2013. His research interests include Power Systems, Power Electronics, Renewable Energy, Control System Engineering, and Deep Learning.