The Impact of Big Data Analytics on Firm's Operational Performance: Mediating Role of Knowledge Management Process

Anas Iftikhar
Department of Economic Sciences, Università Del Salento, Lecce, Italy.
anas.iftikhar@unisalento.it, anasiftikharwmg@gmail.com

Imran Ali
School of Business and Law, Central Queensland University, Australia.
i.ali@cqu.edu.au

Adeel Shah
Institute of Business Management, Karachi, Pakistan.
adeel.shah@iobm.edu.pk

Abstract

Big data analytics is the use of advanced analytical techniques on a large dataset to extract meaningful information and knowledge for rational decision making on complex operational problems. Despite the conceptualized nexus between big data analytics and knowledge management, there is a lack of empirical evidence at the nexus of these two important concepts. This research aims to bridge the current gap by devising a model that delves into the direct influence of big data analytics on a firm's operational performance and mediating effect of the knowledge management process (knowledge acquisition, knowledge dissemination, and knowledge application). The model is tested with data based on a sample of 84 manufacturing companies from Pakistan. The results reveal that the knowledge management process has a full mediating effect between big data analytics and operational performance. We contribute to the extant literature of big data analytics and operational performance by offering a more nuanced understanding of the different components of the knowledge management process. These findings provide strategic insights for the senior management on how to best capitalize on the benefits of big data analytics.

Keywords
Big data analytics, Knowledge Management, Performance, Structural Equation Model, Empirical study.

1. Introduction

Supply chains (SCs) are deemed the arteries of today's globalized economy. As such, supply chain management has become an essential area of research across all spheres of management (Ali & Gölgeci, 2021). However, contemporary supply chains are more extended and complex, necessitating more sophisticated communication, collaboration, and control mechanism than ever before (Iftikhar et al., 2021; Ali et al., 2021). In modern supply chains, components and commodities are being purchased from multiple continents, assembled in a different continent, and distributed worldwide. Take, for example, Apple, Dell, Samsung, and others. Further, firm's operating in these complex supply chains generate a massive amount of structured and unstructured data. To process these big data, highly sophisticated methods are required since they cannot be processed through the traditional ones. The use of big data facilitates evidence-based decision making, instead of instincts or intuition driven decisions. Hence, over the past decade, big data analytics (BDA) has gained its importance not only among practitioners but also among academicians (Wamba et al., 2017).

Despite several advances, yet the extant literature has explored the role of BDA in understanding disaster resilience, (Papadopoulos et al., 2017), supply chain resilience (Iftikhar et al., 2021), or sustainable performance (Raut et al.,

2019). So far, the beneficial effects of BDA are not fully achieved because of the issue of data quality and the challenges of how data is acquired and analyzed. This further requires a diverse set of practices from different disciplines and by different actors. Without proper domain knowledge, the desired BDA result cannot be achieved. Because it is human knowledge that decides which information extracted from the big data needs to be used for decision making (Ferraris et al., 2019).

In the dynamic marketplace where supply chains are competing with other supply chains, competitiveness is gained through the knowledge of SC partners. As a result, knowledge management (KM) has emerged as an important field of study within the supply chain management domain (Ali & Gurd, 2020). An important objective of knowledge management is to assure effective decision making through the knowledge generated by BDA (Sumbal et al., 2017; Ali et al., 2021). Technologically oriented organizations like Amazon, Facebook, and eBay efficiently use BDA to manage the conglomerate amount of knowledge to increase their revenues and enhance their operations (Davenport and Patil, 2012). The growing academic interest has been observed in big data analytics, however, to what extent the knowledge management process enables BDA to support firms in achieving their strategic plans (sustainability, resilience, operational performance) is an area that warrants further examination (Giannoccaro & Iftikhar, 2020). Prior research also highlighted the importance of studying the link between BDA and KM (Davenport, 2013) as well as BDA and firm performance (Ali & Gölgeci, 2019). The BDA in the literature is characterized by volume, velocity, variety, veracity, and value (Wamba et al., 2017), while KM by knowledge acquisition, knowledge dissemination, and knowledge application (Schoenherr et al., 2014). As a result, BDA is capable to identify hidden knowledge and generate new useful information for the decision makers (Ali, 2019; Ali & Aboelmaged, 2021). The KM attributes have been discussed in the literature to improve business efficiency and gain competitive advantage (Witherspoon et al., 2013). While extant literature mentions the positive link between BDA and sustainable and resilience performance (Raut et al., 2019; Papadopoulos et al., 2017), the mechanism that supports the BDA towards positive effect on operational performance is not well understood. This research aims to examine this missing link, by investigating the intervening role of KM attributes (knowledge acquisition, knowledge dissemination, and knowledge application) between BDA and a firm's operational performance.

To achieve the aim of our research, first, we empirically test the direct effects of BDA in improving the firm's operational performance. We have then tested the sequential mediating effects (indirect effects) of knowledge management components (knowledge acquisition, knowledge dissemination, and knowledge application) between BDA and the firm's operational performance. An empirical analysis was performed by collecting data from an emerging economy, Pakistan, and analysis was performed through covariance-based structural equation modeling technique.

The remainder of the paper is organized as follows. The research model along with the research hypothesis is proposed in Section 2, Section 3 discusses the methodology adopted, then Section 4 explicates the results of the empirical model and presents the theoretical, while conclusion including managerial is presented in section 5.

2. Research Model and Hypotheses

The proposed research framework, as given in Figure 1, is developed based on the knowledge based view (KBV) (Grant, 1996; Kogut and Zander, 1992), which assumes knowledge as a source of competitive advantage. Grant (1996) argued that knowledge energizes the KM process, and it complements different kinds of knowledge. In a similar vein, BDA possesses the capability to capture and utilize different kinds of knowledge from various sources and in various formats to produce meaningful knowledge for efficient decision making (Kitchin, 2013).

We contend, based on the KBV theory above, that the knowledge management process is the missing link that may interfere between BDA and firm operational performance. In an extended SC, there is an abundance of knowledge which is quite often a managerial challenge to efficiently handle (Nuruzzaman et al., 2018). Andersson et al. (2015) argued that firms with greater expertise in handling various types of knowledge are far more innovation oriented and may better maximize other internal resources and capabilities, like BDA. Further, the main reason behind empirically validating the above phenomena is that the earlier studies found an inconsistent result between information system (IS) and KM investments over the improved business and operational efficiency (Irani, 2010). Also, many studies are conducted in the developed countries, whereas less focus on emerging and developing countries is found. The focus of E&DE firms on IS and KM related investments is limited and not mature. Apart from the beneficial effects of BDA, its successful implementation is also a big challenge (Gandomi and Haider,

2015). Moktadir et al. (2018) mentioned that due to the lack of trained workforce, lack of technical infrastructure, data integration complexities, etc., firms cannot exploit the full potential of BDA in their business operations.

To conceptualize the KM process, we draw on the three acknowledged aspects of knowledge acquisition, knowledge dissemination, and knowledge application (Gold et al., 2001). The knowledge acquisition process corresponds to the techniques directed at new knowledge creation to improve the core competencies (Lyles and Salk, 1996). Knowledge dissemination considers making acquired knowledge useful to the organization by converting implicit information into specific knowledge (Gold et al., 2001). This is particularly important in an SC relationship, given the diversity of complex information across the SC participants (Roy et al., 2004); whereas knowledge application refers to the process of utilizing the shared information to solve new problems and devise strategies (Schoenherr et al., 2014).

Further, big data analytics enables a massive source of data/knowledge to be instantly stored in the main server, which is linked to different applications within a company. This big data can be used to make rational decisions and solve diverse operational hiccups. To use a specific set of information from the big data pool for a problem of nature, managers would need a structured knowledge management process—knowledge acquisition, knowledge dissemination, and knowledge application. Knowledge acquisition would enable the acquisition of a subset of data (from the main data pool) given the problem at hand such as supply-demand misalignment. Knowledge dissemination facilitates sharing the relevant information in a usable form. Knowledge application supports identifying the hidden trend and developing the required course of action. We, therefore, argue that the use of big data analytics through a structured knowledge management process would have much better implications for performance improvement.

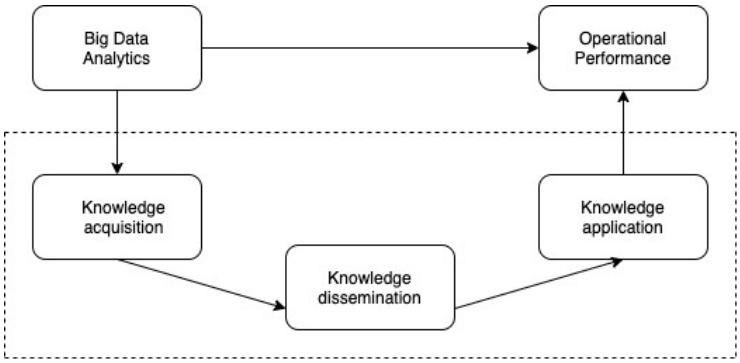

Figure 1. Proposed research model

Thus, based on our above explanation, the following are the proposed hypotheses:
H1. The BDA has a direct positive and significant relationship with Operational Performance.
H2. The BDA has a significant positive impact on Operational Performance via knowledge acquisition, knowledge dissemination, and knowledge application (sequentially).

3. Research Methodology

3.1 Sample and Data Collection

Consistent with the objective of this research, a quantitative method with an online survey questionnaire as the primary data collection tool was employed. A structured survey questionnaire was designed following the guidelines of Dillman (2011). The data for this research is collected from an emerging and developing economy (E&DE), Pakistan, to explore the role of BDA in enabling KM attributed to the firm's operational performance. The E&DEs are more vulnerable to SC disruptions and adversity due to the political instability, hence are more conservative in resource allocation. This study on BDA and KM particularly from an E&DE makes it particularly relevant. The target population for our research is the full-time professionals having a minimum of 2-3 years of experience in Supply Chain Analytics/Business Analytics/Business Intelligence, currently working in Pakistan. The relevant experience was deemed necessary to assure the reliability of the responses. We approached the participants through

a professional networking platform LinkedIn and the university alumni database. In total, we asked 500 participants to fill the survey questionnaire and received 84 usable responses. The response rate in our case was (16.6 %), which is considered adequate to conduct statistical analysis (Han et al., 2017). As presented in the participant's Table 1, the demographic details of the participants are fairly distributed.

Table 1: Participant profile.

Profile		Number	Percentage
Gender	Female	11	13%
	Male	73	87%
Age	25 - 34	58	69%
	35 - 44	20	24%
	45 - 54	6	7%
Experience (years)	3-5	53	63%
	6-8	9	11%
	9-11	5	6%
	More than 11 years	17	20%
Firm Size	500 - 1000 employees	20	24%
	Below 500 employees.	19	23%
	More than 1000 employees.	45	54%
Firm Sales (PKR) Million	0 - 1000	18	21%
	1001 - 2000	11	13%
	2001 - 3000	16	19%
	> 3001	39	46%

3.2 Construct Operationalization

In this study, we adopted the established and validated measurement scales from the extant literature. We measured the constructs through five-point Likert scales, where 1 represents "strongly disagree" and 5 represents "strongly agree". In Table 2, details of each construct with its measurement items are given.

Table 2: Measurement Items

Construct	Measurement Item	Reference
Big Data Analytics (BDA)	Our organization is capable of parallel computing to address voluminous data.	Choi et al., 2018; Wamba et al., 2017
	Real-time assessment of data and information has helped the organization in better decision making.	
	Our system is capable to handle semi-structured and unstructured data.	
	Truthfulness and accuracy of data has helped our organization.	
	Data driven intelligence has made decision making more effective.	
	Our organization has good infrastructure and facilities.	
	The interchange ability of services (cloud, mobile, and analytics) plays key role.	
	Analytics personnel are proficient with programming, data management, new tools, etc.	
Knowledge Acquisition (KAQ)	Our organization values employees' attitudes and opinions.	Darroch (2003).
	Our organization has well developed financial reporting systems.	
	Our organization is quick to detect changes in customer preference	

	and their adoption. Our organization works in partnership with international customers. Our organization gets information from market surveys.	
Knowledge Dissemination (KD)	Our organization actively arranges coaching and training sessions for knowledge transfer. Our organization regularly conduct departmental meetings to discuss market trend and developments. Our organization share important information with all employees through internal web portal, emails or other technological means. Our organization's suppliers are able to share his expertise in new technology with us. Our organization conduct frequent meetings with their suppliers to develop new knowledge. In the buyer supplier relationship, our organization convert technical know-how of the supplier into our new products and processes.	Darroch (2003), Blome et al., (2014). (Ali & Gurd, 2020)
Knowledge Application (KAP)	Our organization has developed processes for using knowledge to solve new problems. Our organization has developed processes to locate and apply knowledge to changing competitive conditions. Our organization has methods to analyze and critically evaluate knowledge to generate new patterns and knowledge for future use. Our organization is equipped with the ability to apply knowledge to adjust strategic direction.	Schoenherr et al., (2014); Sangari et al., (2015); Tseng, (2014).
Operational Performance (OP)	We can earn our expected profit. Our return on investment is very high. We have satisfactory sales growth. We meet the expected quality of our supply chain partners. Our customer service level is very high. We can deliver products within the desired lead time.	Tseng, (2014); Chowdhury et al. (2019)

3.3 Measurement Model Evaluation

To empirically validate the research model, this study adopted Covariance Based Structural Equation Modelling (CB-SEM). As suggested by Anderson and Gerbing (1988), this SEM technique uses two step approach, first by analyzing measurement and then the structural model. In this paper, we considered the following goodness of fit indices following Hair, Anderson, Tatham, and William (1998): root mean square error of approximation (RMSEA) and comparative fit index (CFI), TLI, NFI. We performed these analyses on AMOS software.

We developed the path diagrams on AMOS as shown in Figures 2 and 3. Tables 4 – 6 mention the goodness of fit indices, where the chi-square ($\chi 2$ /df) = 1.729 (<3.0), CFI = 0.927 (>0.90), TLI = 0.911, IFI = 0.931, RMSEA = 0.054. Therefore, we can conclude that in this collected dataset, the goodness of fit statistics has an acceptable level of values.

To assess the construct reliability, we examine Cronbach's alpha and composite reliability values. As mentioned in Table 3, Cronbach's alpha ranges from 0.760 to 0.906 and composite reliability ranges from 0.839 to 0.934 which are well above the recommended values (Hair et al., 1998) The items were loaded to their respective constructs (Figure 2 and 3) with a factor loading of well above the recommended value (0.70), confirming unidimensionality of each construct (Hair et al., 1998). Besides, for convergent validity, we also examine the average variance extracted (AVE), which has a minimum cut-off requirement to be higher than 0.50 (Bagozzi and Yi, 1988; Hair et al., 2011). Our AVE values range from 0.502 to 0.780.

Table 3: Measurement Model

Constructs	Cronbach's Alpha	Composite Reliability	Average Variance Extracted (AVE)
BDA	0.856	0.890	0.537
KAP	0.906	0.934	0.780
KAQ	0.760	0.839	0.512
KD	0.892	0.917	0.650
OPER	0.800	0.857	0.502

Table 4: GFI Indices – Chi-Square

Model	NPAR	CMIN	DF	P	CMIN/DF
Default model	89	596.353	345	.000	1.729
Saturated model	434	.000	0		
Independence model	56	1832.979	378	.000	4.849

Table 5: Comparative fit index

Model	NFI Delta1	RFI rho1	IFI Delta2	TLI rho2	CFI
Default model	.895	.844	.931	.911	.927
Saturated model	1.000		1.000		1.000
Independence model	.000	.000	.000	.000	.000

Table 6: RMSEA index

Model	RMSEA	LO 90	HI 90	PCLOSE
Default model	.054	.081	.106	.000
Independence model	.215	.206	.225	.000

3.4 Hypothesis Testing

Following the assessment of the measurement model, we test the hypothesis. We have presented the outputs from the AMOS software of both, the direct effect (H1) and the sequential mediation effect (H2), see Figures 2 and 3. Figure 2 shows that the direct effect of BDA on OPER is positive and significant (β=0.45; p<0.000). To test the sequential mediation (indirect effects), we performed bootstrapping with 2000 bootstrap samples using SEM. Figure 3 presents (H2) the indirect effects of BDA on OPER through the knowledge management process (knowledge acquisition => knowledge dissemination => knowledge application) becomes insignificant with a substantial decrease in the magnitude of beta value (β=0.25; p=0.100).

According to Baron and Kenny (1986) if the relationship between an independent variable and dependent variable is changed from significant to insignificant or vice versa as well the value of the path coefficient is reduced due to the mediator, then the model shows a full mediation effect. Since in our model, after introducing the three main components of the knowledge management process as mediators, the significant effect from BDA to OPER not only becomes insignificant but also the path coefficient reduced from β=0.45 to β=0.25. We can conclude that our model

has a full mediation effect. That is, the knowledge management process significantly mediates the relationship between BDA and OPER.

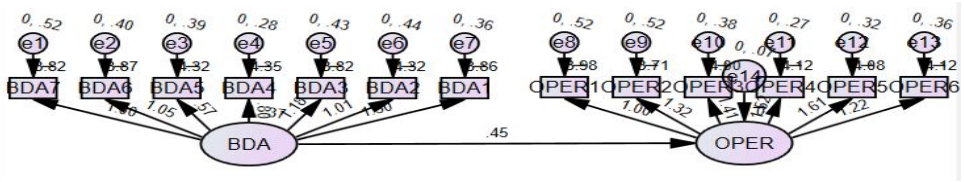

Figure 2. Path diagram with a direct effect of BDA on OPER

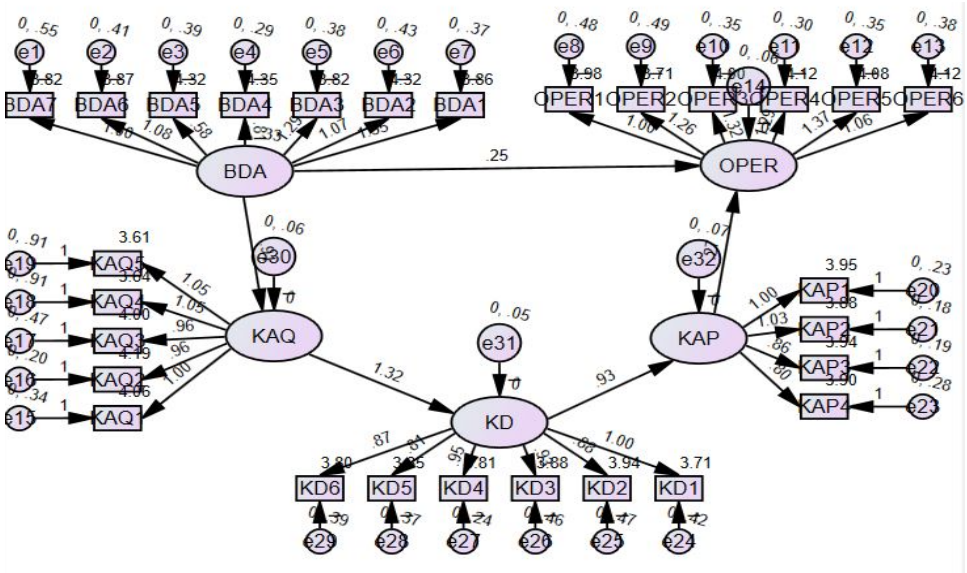

Figure 3. Path diagram with sequential mediation effect of Knowledge management process

4. Discussion and Implications

This is one of the first studies that examine how different components of knowledge management process in a supply chain mediate the relationship between BDA and OPER. Unlike the earlier research, whose focus was primarily on single KM capability within an enterprise (Ferraris et al., 2019; Cui et al., 2005), this research examines the critical components in the KM process from the SC perspective. The SCs generate tons of information in the form of big data analytics, therefore the unification of a large amount of data and dealing with it with precision is essential for an improved firm's operational performance. It has been argued in the extant literature (Pauleen & Wang, 2017) that knowledge is one of the significant components behind big data theorization. Through this study, we empirically validate the prior research; that is, the knowledge management process plays a substantial role to exploit the full potential of big data analytics and achieve better firm operational performance.

We argue in this research that the driving force behind the analysis of data is the human experience. It is at the discretion of human knowledge to determine how the information will be extracted and at which organizational level it needs to be applied. Therefore, we found that to fully benefit from the BDA, firms must also nurture and establish the KM process. In this disruptive and globalized SC, the key resource firms need to recognize is the managerial decision-making ability, accomplished through knowledge generated from big data analytics (Thomas and Chopra, 2020). It is of utmost significance, to bring people with the domain knowledge together with the right data, but also need to include people with critical problem-solving abilities to efficiently leverage them. Thus, this approach will pave its way towards creating a data driven decision making culture.

This research is specifically conducted in an emerging and developing economy, will be useful in policy making for BDA adoption. Through this research, we suggest to the top management of these economies that firms need to not

only develop BDA capabilities but also need to combine the domain expertise and knowledge, leading towards better decision making and performance. It has also been underlined from this research that firms need to develop KM capabilities to reap the benefits of these positive results.

We have the following theoretical contributions in this study. First, we have tested an empirical validation between BDA adoption and the firm's operational performance in an E&DE. Secondly, we also contributed to the literature of KM by empirically testing the critical components of the KM process in identifying the potential of BDA towards improved operational performance. We find out that the components of KM process (knowledge acquisition, knowledge dissemination, and knowledge application) are more effective in influencing BDA and operational performance. Finally, we also contributed from the KBV standpoint, where we theorize the components of KM process as the valuable bundle of resources that provides specific advantages to the firms.

5. Conclusions

In recent years we have seen the grown significance of BDA adoption among SCM professionals and academicians at the different organizational levels (Wang et al., 2016). In the current hypercompetitive environment, BDA has evolved into an advanced organizational capability that may lead to an improved demand prediction and firm performance (Arunachalam et al., 2018). So far, little knowledge exists that to what extent KM components complement the BDA adoption for an improved firm's operational performance.

In this paper, we focused on the relevance of the KM process to maximize the benefit of big data. Firms can harness a long-term competitive edge by developing and integrating resources and capabilities specific to big data use. Our findings show that, in addition to investing in BDA attainment, businesses must also instigate a structured knowledge management process to generate value. More specifically, we investigated that whether the relationship between BDA and OP is contingent on the KM process. We performed this study by conducting an empirical survey of 84 participants in Pakistan, particularly from an E&DE perspective. Our proposed model highlights that there is a full mediation effect of the KM process between BDA adoption and the firm's OP.

Future research may examine the dynamic capabilities and resources between the understudied concepts. This will lead to a deeper understanding of the underlying relationship mechanism. We also suggest future researchers study the extent to which the combined interplay of BDA and KM capabilities may affect SC resiliency and sustainability. We suggest studying this phenomenon considering different turbulence levels through an agent-based model, which is more suitable in resilience studies (Giannoccaro & Iftikhar, 2020). Further studies may also focus on the key resources valuable for maximizing the utility of big data, for instance how the new managerial skills, complex problem solving, critical thinking, and creativity may affect the managerial decision-making ability. As for the limitation, the result of this study is based on a limited sample size of 84 respondents from an E&DE. The result of this research is a part of our ongoing research project.

References

Ali, I. (2019). The impact of industry 4.0 on the nexus between supply chain risks and firm performance. *79th Annual Meeting of the Academy of Management 2019: Understanding the Inclusive Organization, AoM 2019*. https://doi.org/10.5465/AMBPP.2019.77

Ali, I., & Aboelmaged, M. G. S. (2021). Implementation of supply chain 4.0 in the food and beverage industry: perceived drivers and barriers. *International Journal of Productivity and Performance Management*. https://doi.org/10.1108/IJPPM-07-2020-0393.

Ali, I., Arslan, A., Khan, Z., & Tarba, S. Y. (2021). The Role of Industry 4.0 Technologies in Mitigating Supply Chain Disruption: Empirical Evidence From the Australian Food Processing Industry. *IEEE Transactions on Engineering Management*, 1-11. doi:10.1109/TEM.2021.3088518

Ali, I., & Gölgeci, I. (2019). Where is supply chain resilience research heading? A systematic and co-occurrence analysis. In *International Journal of Physical Distribution and Logistics Management* (Vol. 49, Issue 8). https://doi.org/10.1108/IJPDLM-02-2019-0038

Ali, I., & Gölgeci, I. (2021). Managing climate risks through social capital in agrifood supply chains. Supply Chain Management, 26(1). https://doi.org/10.1108/SCM-03-2020-0124

Ali, I., & Gurd, B. (2020). Managing operational risks through knowledge sharing in food supply chains. *Knowledge and Process Management*, *27*(4). https://doi.org/10.1002/kpm.1645

Anderson, J. C., & Gerbing, D. W. (1988). Structural equation modeling in practice: A review and recommended two-step approach. *Psychological Bulletin*, *103*(3). https://doi.org/10.1037//0033-2909.103.3.411

Andersson, U., Gaur, A., Mudambi, R., & Persson, M. (2015). Unpacking Interunit Knowledge Transfer in Multinational Enterprises. *Global Strategy Journal*, *5*(3). https://doi.org/10.1002/gsj.1100

Arunachalam, D., Kumar, N., & Kawalek, J. P. (2018). Understanding big data analytics capabilities in supply chain management: Unravelling the issues, challenges and implications for practice. *Transportation Research Part E: Logistics and Transportation Review*, *114*. https://doi.org/10.1016/j.tre.2017.04.001

Bagozzi, R. P., & Yi, Y. (1988). On the evaluation of structural equation models. *Journal of the Academy of Marketing Science*, *16*(1). https://doi.org/10.1007/BF02723327

Baron, R. M., & Kenny, D. A. (1986). The moderator–mediator variable distinction in social psychological research: Conceptual, strategic, and statistical considerations. Journal of personality and social psychology, 51(6), 1173.

Blome, C., Schoenherr, T., & Eckstein, D. (2014). The impact of knowledge transfer and complexity on supply chain flexibility: A knowledge-based view. *International Journal of Production Economics*, *147*(PART B). https://doi.org/10.1016/j.ijpe.2013.02.028

Choi, T. M., Wallace, S. W., & Wang, Y. (2018). Big Data Analytics in Operations Management. *Production and Operations Management*, *27*(10). https://doi.org/10.1111/poms.12838

Chowdhury, M. M. H., Quaddus, M., & Agarwal, R. (2019). Supply chain resilience for performance: role of relational practices and network complexities. *Supply Chain Management*, *24*(5). https://doi.org/10.1108/SCM-09-2018-0332

Cui, A. S., Griffith, D. A., & Cavusgil, S. T. (2005). The influence of competitive intensity and market dynamism on knowledge management capabilities of multinational corporation subsidiaries. *Journal of International Marketing*, *13*(3). https://doi.org/10.1509/jimk.13.3.32

Darroch, J. (2003). Developing a measure of knowledge management behaviors and practices. *Journal of Knowledge Management*, *7*(5). https://doi.org/10.1108/13673270310505377

Davenport, T. H. (2013). Analytics 3.0 - In the new era, big data will power consumer products and services. *Harvard Business Review*.

Davenport, T. H., & Patil, D. J. (2012). Data scientist: The sexiest job of the 21st century. *Harvard Business Review*, *90*(10).

Dillman, D. A. (2007). Mail and internet surveys: The tailored design method, 2nd ed. In *Mail and internet surveys: The tailored design method, 2nd ed.*

Ferraris, A., Mazzoleni, A., Devalle, A., & Couturier, J. (2019). Big data analytics capabilities and knowledge management: impact on firm performance. *Management Decision*, *57*(8). https://doi.org/10.1108/MD-07-2018-0825

Gandomi, A., & Haider, M. (2015). Beyond the hype: Big data concepts, methods, and analytics. *International Journal of Information Management*, *35*(2). https://doi.org/10.1016/j.ijinfomgt.2014.10.007

Giannoccaro, I., & Iftikhar, A. (2020). Mitigating ripple effect in supply networks: the effect of trust and topology on resilience. *International Journal of Production Research*. 1 – 18. https://doi.org/10.1080/00207543.2020.1853844

Gold, A. H., Malhotra, A., & Segars, A. H. (2001). Knowledge management: An organizational capabilities perspective. *Journal of Management Information Systems*, *18*(1). https://doi.org/10.1080/07421222.2001.11045669

Grant, R. M. (1996). Prospering in Dynamically-competitive Environments: Organizational Capability as Knowledge Integration. *Organization Science*, *7*(4). https://doi.org/10.1287/orsc.7.4.375

Hair, J. F., Anderson, R. E., Tatham, R. L., & Black, W. C. (2018). Multivariate Data Analysis, Multivariate Data Analysis. In *Multivariate Data Analysis, Multivariate Data Analysis B2 - Multivariate Data Analysis, Multivariate Data Analysis* (Vol. 87, Issue 4).

Hair, J. F., Ringle, C. M., & Sarstedt, M. (2011). PLS-SEM: Indeed a silver bullet. Journal of Marketing theory and Practice, 19(2), 139-152.

Han, J. H., Wang, Y., & Naim, M. (2017). Reconceptualization of information technology flexibility for supply chain management: An empirical study. *International Journal of Production Economics*, *187*. https://doi.org/10.1016/j.ijpe.2017.02.018

Iftikhar, A., Purvis, L., & Giannoccaro, I. (2021). A meta-analytical review of antecedents and outcomes of firm resilience. *Journal of Business Research,* 135, 408-425. https://doi.org/10.1016/j.jbusres.2021.06.048

Irani, Z. (2010). Investment evaluation within project management: An information systems perspective. *Journal of the Operational Research Society*, *61*(6). https://doi.org/10.1057/jors.2010.10

Kitchin, R. (2013). Big data and human geography: Opportunities, challenges and risks. *Dialogues in Human Geography*, *3*(3). https://doi.org/10.1177/2043820613513388

Kogut, B., & Zander, U. (1992). Knowledge of the Firm, Combinative Capabilities, and the Replication of Technology. *Organization Science*, *3*(3).

Lyles, M. A., & Salk, J. E. (1996). Knowledge acquisition from foreign parents in international joint ventures: An empirical examination in the Hungarian context. *Journal of International Business Studies*, *27*(5). https://doi.org/10.1057/palgrave.jibs.8490155

Moktadir, M. A., Ali, S. M., Paul, S. K., & Shukla, N. (2019). Barriers to big data analytics in manufacturing supply chains: A case study from Bangladesh. *Computers and Industrial Engineering*, *128*. https://doi.org/10.1016/j.cie.2018.04.013

Nuruzzaman, N., Singh, D., & Pattnaik, C. (2018). Competing to be innovative: Foreign competition and imitative innovation of emerging economy firms. *International Business Review*. https://doi.org/10.1016/j.ibusrev.2018.03.005

Papadopoulos, T., Gunasekaran, A., Dubey, R., Altay, N., Childe, S. J., & Fosso-Wamba, S. (2017). The role of Big Data in explaining disaster resilience in supply chains for sustainability. *Journal of Cleaner Production*, *142*. https://doi.org/10.1016/j.jclepro.2016.03.059

Pauleen, D. J., & Wang, W. Y. C. (2017). Does big data mean big knowledge? KM perspectives on big data and analytics. In *Journal of Knowledge Management* (Vol. 21, Issue 1). https://doi.org/10.1108/JKM-08-2016-0339

Raut, R. D., Mangla, S. K., Narwane, V. S., Gardas, B. B., Priyadarshinee, P., & Narkhede, B. E. (2019). Linking big data analytics and operational sustainability practices for sustainable business management. *Journal of Cleaner Production*, *224*. https://doi.org/10.1016/j.jclepro.2019.03.181

Roy, S., Sivakumar, K., & Wilkinson, I. F. (2004). Innovation Generation in Supply Chain Relationships: A Conceptual Model and Research Propositions. *Journal of the Academy of Marketing Science*, *32*(1). https://doi.org/10.1177/0092070303255470

Sangari, M. S., Hosnavi, R., & Zahedi, M. R. (2015). The impact of knowledge management processes on supply chain performance: An empirical study. *International Journal of Logistics Management*, *26*(3). https://doi.org/10.1108/IJLM-09-2012-0100

Schoenherr, T., Griffith, D. A., & Chandra, A. (2014). Knowledge management in supply chains: The role of explicit and tacit knowledge. *Journal of Business Logistics*, *35*(2). https://doi.org/10.1111/jbl.12042

Sumbal, M. S., Tsui, E., & See-to, E. W. K. (2017). Interrelationship between big data and knowledge management: an exploratory study in the oil and gas sector. *Journal of Knowledge Management*, *21*(1). https://doi.org/10.1108/JKM-07-2016-0262

Thomas, A., & Chopra, M. (2019). On how big data revolutionizes knowledge management. In *Digital Transformation in Business and Society: Theory and Cases*. https://doi.org/10.1007/978-3-030-08277-2_3

Tseng, S. M. (2014). The impact of knowledge management capabilities and supplier relationship management on corporate performance. *International Journal of Production Economics*, *154*. https://doi.org/10.1016/j.ijpe.2014.04.009

Wamba, S. F., Gunasekaran, A., Akter, S., Ren, S. J. fan, Dubey, R., & Childe, S. J. (2017). Big data analytics and firm performance: Effects of dynamic capabilities. *Journal of Business Research*, *70*. https://doi.org/10.1016/j.jbusres.2016.08.009

Wang, G., Gunasekaran, A., Ngai, E. W. T., & Papadopoulos, T. (2016). Big data analytics in logistics and supply chain management: Certain investigations for research and applications. In *International Journal of Production Economics* (Vol. 176). https://doi.org/10.1016/j.ijpe.2016.03.014

Witherspoon, C. L., Bergner, J., Cockrell, C., & Stone, D. N. (2013). Antecedents of organizational knowledge sharing: A meta-analysis and critique. *Journal of Knowledge Management*, *17*(2). https://doi.org/10.1108/13673271311315204.

Further reading

Ali, Imran, Nagalingam, Sev, & Gurd, Bruce. (2017). Building resilience in SMEs of perishable product supply chains: enablers, barriers and risks. *Production Planning & Control*, 28(15), 1236-1250.

Ali, Imran, Nagalingam, Sev, & Gurd, Bruce. (2018). A resilience model for cold chain logistics of perishable products. *The International Journal of Logistics Management*, 29(3), 922-941. doi:https://doi.org/10.1108/IJLM-06-2017-0147.

Butt, Atif Saleem, & Ali, Imran. (2020). Understanding the implications of Belt and Road Initiative for sustainable supply chains: an environmental perspective. *Benchmarking: An International Journal*, 27(9), 2631-2648. doi:10.1108/BIJ-04-2020-0143.

Ali, I., Satie, S. & Thai, V. (2020). Adopting Industry 4.0 Technologies in Agri-Food Supply Chains. In E. Aktas, M. Bourlakis, I. Minis, & V. Zeimpekis (Eds.), Supply Chain 4.0: Improving Supply Chains with Analytics and Industry 4.0 Technologies (pp. 1-20). UK: Kogan Page.

Ali, I. & Johnson, M. (2019). Drivers and barriers to digital transformation in agri-food supply chains, Wicked Solutions to Wicked Problems: The Challenges Facing Management Research and Practice, ANZAM 2019 Conference, Cairns, 3-6 December 2019.

Biographies

Dr. Anas Iftikhar has completed his Ph.D. in Economics, Management, and Quantitative Methods from the Università del Salento, Italy. His research focuses on the role of organizational capabilities to improve the resilience of supply chains, considering different organizational contexts. In his research, he applies different methodologies such as NK fitness landscape, partial least square - structural equation modelling, and quantitative meta-analysis. His work has been previously published in the *Journal of Business Research and International Journal of Production Research.* Anas also possess supply chain industry experience in the consumer goods and utility sector. He is experienced in the inventory planning and operations management area.

Dr. Imran Ali is currently a Lecturer (Assistant Professor) in Operations and Innovation Management at the School of Business and Law in Central Queensland University, Australia. Dr. Imran also serves as a 'Food Systems Expert' at the FAO of the United Nations to develop resilient food systems in the developing and developed countries of the world. He holds a Ph.D. in Business Management from the University of South Australia. His current research focuses on supply chain risk and resilience, Industry 4.0, climate change, sustainable supply chain performance. Dr. Imran's research has been featured in several good-quality journals and conference proceedings such as *IEEE Transactions on Engineering Management, Production Planning and Control, Supply Chain Management: An International Journal, International Journal of Physical Distribution and Logistics Management, and Academy of Management Best Paper Proceedings*, among others.

Adeel Shah is a Senior Lecturer in Supply Chain and Logistics at the Institute of Business Management, Karachi, Pakistan. He holds a B. Sc in Textile Science, and also an MBA in Supply Chain Management. Currently, Adeel is pursuing his Ph.D. at the University of Kuala Lumpur, Malaysia in Supply Chain Management. His research expertise lies in textile and apparel operations. Adeel also possesses several years industry experience in the Textile and Apparel sector, managing supply chain operations.