IIoT and Assisted Reality: Re-Shaping Traditional Robotic Cells

E. N. Finley, S. M. DeWildt, N. A. MacArthur, Z. A. Rougeau, and E. I. Sarda

School of Engineering and Technology

Lake Superior State University

Sault Sainte Marie, MI 49783, USA

efinley@lssu.edu, sdewildt@lssu.edu, nmacarthur1@lssu.edu, zrougeau@lssu.edu, esarda@lssu.edu

Abstract

Older generation robot-based production lines necessitate the adaptation to Industry 4.0 standards for smart manufacturing within the factory. Combining assisted reality technology with industrial internet of things (IIoT) networking systems into a robotic manufacturing cell enables communication of critical data to any individual, independently of the human's state. Through assisted reality, the human is unencumbered by a tablet, laptop, or Human-Machine Interface and free to navigate other tasks, while passively monitoring the progress of the production cell. This paper presents the integration of assisted reality and IIoT into an older generation robotic cell. The robustness of the IIoT application is validated through the integration of a diversified range of devices. These devices include an older generation industrial robot, a modern programmable logic controller, a Raspberry Pi embedded system, a series of external digital devices, an industrial analog weight sensor and a custom designed low-cost analog opacity sensor. A system was developed to prove the feasibility of modernizing an older generation robotic cell without altering its technology. The system was tested under multiple conditions, involving data passing through the IIoT, and was found to be reliable in reporting statistics and adapting to user input for 1 hour or 50 cycles.

Keywords

Industrial Internet of Things, Industry 4.0, Assisted Reality

1. Introduction

As the manufacturing industry progresses further through the fourth industrial revolution, the need to create networks of manufacturing information to assist data-driven decision-making becomes ever more critical (Neugebauer, Hippmann, Leis, & Landherr, 2016). In addition, a separate but parallel goal of creating manufacturing data collection networks, is the ability to access production information from anywhere in the world, at any given time (Monostori, 2014). Both of these Industry 4.0 objectives, collecting information at every stage of a manufacturing process and making that information available anytime, anywhere, can be addressed by the use of IIoT.

The IIoT is a cloud-based data storage and sharing network, accessible via the use of many industry-standard brands' technological platforms, such as the Siemens MindSphere system (Tao & Zhang, 2017) and PTC's ThingWorx. By adding IIoT hardware in automated machines, companies can create vast information networks, displaying the state of every cell within the factory, in real time (Wan, et al., 2016). Then, the IIoT data network can be accessed by any compatible devices such as tablets, laptops, personal computers (PCs), or even assisted reality (AR) glasses (Knell, 2019). The use of AR glasses, in particular, adds another dimension to this industry 4.0 application and will be further detailed in this paper.

The fourth industrial revolution and the ever-expanding network of information that is the Internet of Things (IoT) are discussed by (Neugebauer, Hippmann, Leis, & Landherr, 2016). (Monostori, 2014) covers the advantages of remote operation, utilizing the IIoT, from a production perspective. The details of how industry 4.0 is affecting

manufacturing production lines, and what companies have pioneered the developing market are covered by (Tao & Zhang, 2017). (Wan, et al., 2016) outlines how small, previously seen as unimportant devices can be networked together to create a strong source of manufacturing data. Many aspects of this paper, in regards to defining the advantages of updating a dated system with modern IIoT connectivity, are shared with (Knell, 2019). The methodology for connecting individual aspects of a specific production cell to the IIoT is discussed by (Rose, Eldridge, & Chapin, 2015). (Fernández-Caramés & Fraga-Lamas, 2018) and (Crnjac, Veža, & Banduka, 2017) characterize the advantages of IIoT connectivity to all levels of a company, from maintenance to upper management. The advantages and feasibility of IIoT, in terms of keeping the customer up to date on the overall lead time of a project is explained by (Cronin, Conway, & Walsh, 2019). The difference between augmented reality and AR is discussed in length in (Coon, 2018). Finally, (AREA, 2019) discusses how AR has the ability to increase efficiency among industrial workers by providing easily accessible information on the job. Here, we explore the use of AR to access robot-related production data from the cloud, thus making it available to any user through the integration of AR and IIoT on an older generation robot cell.

The following paper has been split into the following sections: Section 2 details the state of the art, section 3 explains the proposed configuration for the application of IIoT, Section 4 outlines implementation, execution, and findings, and lastly, conclusions drawn are presented in Section 5.

2. State of the Art

With the increasing focus on technological advancement amidst the fourth industrial revolution, tools available to industrial engineers are evolving and improving faster than ever before. In this section, the current state of the technological systems, including IIoT and AR, involved with this project is explained.

2.1 Industrial Internet of Things

Before expressing the usefulness of IIoT technology, the IIoT must be thoroughly defined. The term "Internet of Things" refers broadly to the extension of network connectivity and computing capability to objects, devices, sensors, and items not ordinarily considered to be computers. These "smart objects" require minimal human intervention to generate, exchange, and consume data; they often feature connectivity to remote data collection, analysis, and management capabilities. (Rose, Eldridge, & Chapin, 2015) describes an IoT device that autonomously records and broadcasts data. IIoT is a similar concept to IoT, but applied strictly to industrial devices.

The integration of an IIoT system is a challenge, but it can provide greater flexibility to the customer and smart manufacturers as a whole (Fernández-Caramés & Fraga-Lamas, 2018), (Crnjac, Veža, & Banduka, 2017). The horizontal integration of a manufacturing system can be described as the use of information in production planning and business systems. It expands on the knowledge of the manufacturing operations and the current state of production to customers and suppliers, which can be shared with companies. This offers an unprecedented level of openness and clarity (Cronin, Conway, & Walsh, 2019). When speaking specifically about IIoT rather than IoT, concepts of production status, lead time, overall equipment effectiveness (OEE) and material handling become a major part of the conversation. All of these variables of the manufacturing process can be monitored and regulated in a well horizontally integrated facility utilizing IIoT control systems. For example: if a breakdown occurs in a facility of multiple production lines, the IIoT control system would locate the failure, reroute the product intended for that line to a different line, notify maintenance personnel and even send an adjusted production status report and lead time to the customer. This would all take place autonomously and instantaneously, ensuring that the customer is aware of the new timeline and can adjust their own timelines as needed. IIoT also has safety applications, acting as a watchdog for unsafe facility conditions and raising alarms when necessary. (Gnoni, 2020) has reported that IoT technologies are starting to be adopted to support a more effective management of safety in complex systems.

Establishing IIoT systems in industrial settings without a fully developed rollout of this type of technology into existing facilities is a major difficulty. It appears that IoT technologies have yet to fully permeate the industrial landscape and to unfold its full potential for production management and optimization (Sanneman, 2020). The work presented in this paper aims to prove that IIoT can be integrated in older generation robotic cells without altering the already existing technology of the cell. Furthermore, the research contribution of this paper aims at lowering the initial IIoT investment for otherwise hesitant industries, by proposing a specific integration approach based on existing technology.

2.2 Assisted Reality Heads-Up Display

When discussing AR, an important distinction must be made to separate it from augmented reality. AR refers to any technology that allows a person to view a screen within his or her immediate field of vision, hands free. It differs from augmented reality in that the information on the screen is not overlaid onto a physical environment (Coon, 2018). AR is a simpler technology than augmented reality, but this makes it all the more attractive for a manufacturing environment. Devices, such as heads-up display (HUD) smart glasses, shown in Figure 1, can deliver an AR interface to the user through less hardware than their augmented reality counterparts.

AR often does not require any kind of data preparation or formatting, as long as this data is available in the cloud. This also makes AR devices more economical. Furthermore, AR is ideal for delivering content that was historically being provided to the factory workers on the manufacturing floor, out on the field, or moving about in the warehouse, on paper forms, human-machine interfaces (HMIs) and personal computers (AREA, 2019). Operators can access information more easily by having an HUD screen in the corner of their field of view, without being encumbered by bulky augmented reality hardware that would restrict their vision. Furthermore, such AR devices can be worn at all times, essentially eliminating the need for the operator to be in a particular place at a specific time (e.g., facing an HMI panel) to monitor production status.

Figure 1: Heads-Up Display Smart Glasses

3. Proposed Configuration

A configuration was devised to showcase the use of the IIoT and AR in an Industry 4.0 manufacturing environment.

3.1 Configuration Requirement Analysis

The configuration proposed in this paper is to use the IIoT to network robotic work cells and AR glasses together to replace the HMI on a traditional work cell. For the proposed configuration to be deemed a viable alternative to the traditional hardwired HMI option, it must meet three measurable requirements. The HUD configuration must have a live connection to the IIoT, one that allows for data and information to be sent and received instantaneously, the information received must be always viewable by the operator, and the operator must have a way to communicate with the robot from the HUD.

3.2 Configuration Functionality

The project detailed in this paper utilizes MindSphere, a Siemens Cloud Based IIoT software, to read data from an Allen Bradly Programmable Logic Controller (PLC). The data is first transmitted from the robotic work cell's various sensors to the PLC and it is then broadcasted by MindSphere over the internet. Finally, this data is displayed on HUD on the AR glasses, worn by a human operator. Figure 2 illustrates how information is continuously passed from the robot cell to the HUD on the AR glasses. A Python script running on a Raspberry Pi acts as intermediary between MindSphere and the Android application, which is then displayed in the HUD on the AR glasses (Vuzix

M300XL model), shown in Figure 1. These AR glasses are intended to be used with the cell in place of a traditional HMI.

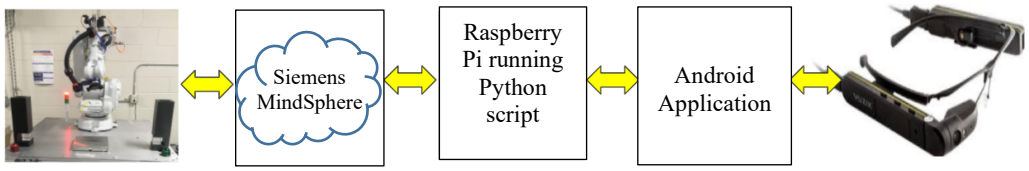

Figure 2: Robot cell to HUD AR glasses communication

In order for MindSphere to read the data from the PLC, a hardware component manufactured by Siemens called "MindConnect IoT2040" must be connected to both the PLC and router via Ethernet. Figure 3 shows the schematic of how MindSphere is integrated into the workcell.

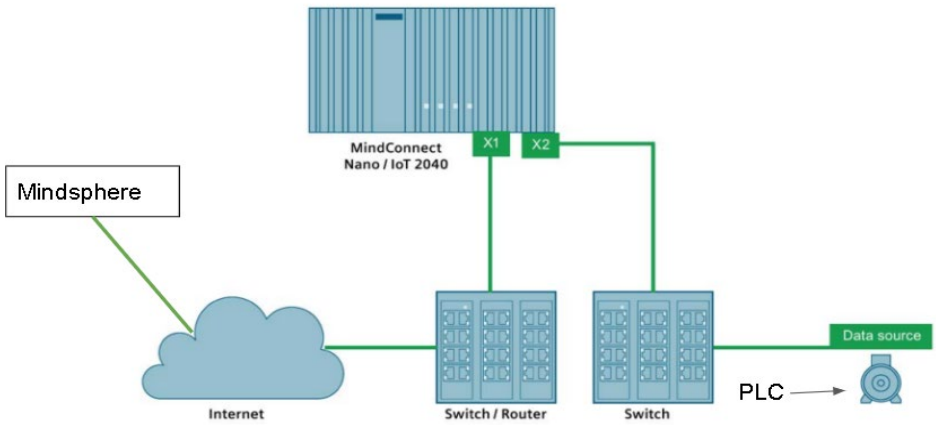

Figure 3: IIoT Networking Configuration

By having a feedback system to monitor the data and status of the cell operate on the IIoT, rather than be hardwired directly into the cell, the system becomes far more customizable than a traditional HMI setup. In one scenario, the users could be anywhere in the world, provided that there is internet connectivity present, and monitor the progress and state of the robotic work cell. These users of the IIoT monitoring system could be the operator of the cell, or even additional plant managers and maintenance technicians, checking in on the condition of the cell. Furthermore, the cell itself could initiate the communication, through IIoT, to the right individual, highlighting targeted information, such as faults, defects, anomalies, emergencies or even likelihood of meeting vs not meeting specific production criteria (e.g. a particular percentage of good parts per day). Expanding this setup to the entire plant, in an additional scenario, a single operator could use a single pair of AR glasses to monitor an entire shop of automated cells. Without the need to physically have any HMI in the line of sight of the operator, different work cells could be logged into using the same pair of AR glasses. The cell being displayed on the HUD on the AR glasses may be selected by the user through the input buttons on the glasses, or even automatically loaded when the user is within a certain radius of the work cell.

In addition to freeing the operator from having to stand directly next to the cell to receive information from it, the AR glasses also allow for information to be passed back to the cell with the use of either buttons on the side of the glasses, or voice commands. In the configuration discussed in this paper, either a button or a voice command can be used to send a signal from the AR glasses, over the IIoT, to the robot to reset and return to home position.

4. Implementation and Execution

The next section describes the implementation of the IIoT configuration and AR technology, described in section 3, onto an older generation robotic work cell.

4.1 Implementation of Technology

To implement the IIoT-AR system described in section 3, a robotic work cell was designed to simulate a quality verification process. The process involves sorting acrylic cubes based on weight and opacity. The cell consists of a refurbished 2004 ABB IRB-140 industrial robot, a custom-designed opacity sensor, an analog weight sensor acting as a scale, a pneumatic gripper and custom designed quickstop wrist end of arm tooling attachment (EOAT), a stack light, a 2018 GuardLogix 5380 Allen-Bradley PLC, Siemens MindConnect IoT2040, a 4GB RAM Raspberry Pi 4, a router, and a pair of 270º Keyence safety scanners. Figure 4 provides an overview of the robot cell, highlighting these main components. Lastly, the AR glasses selected for the project were the Vuzix M300XL model.

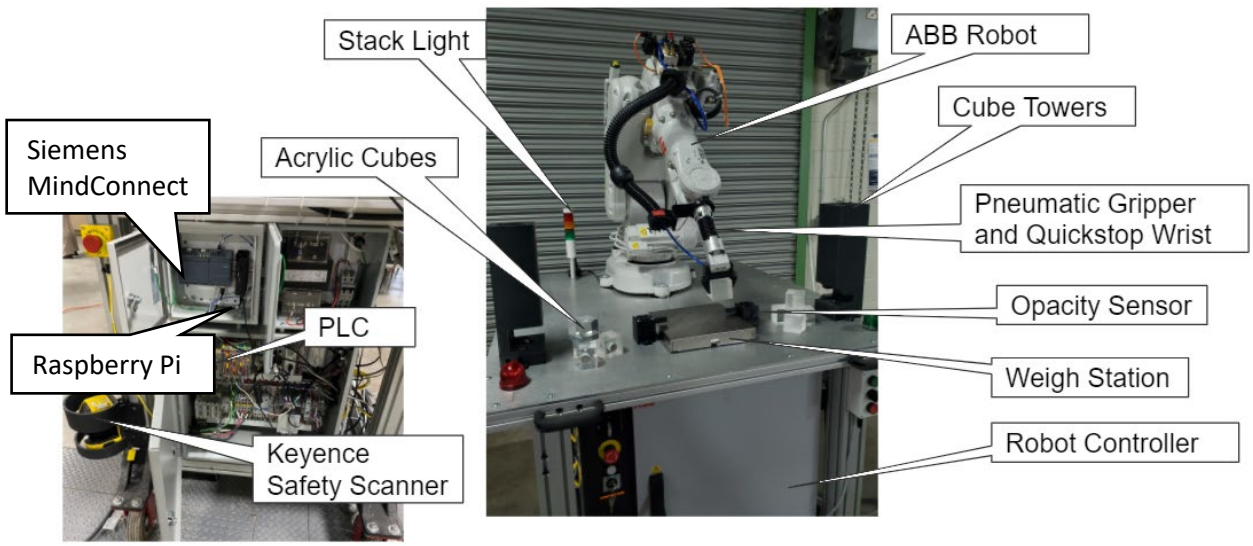

Figure 4: Overview of Robotic Cell

The ABB robotic arm was installed onto the work cell in a central location, so that it had the ability to manipulate all cubes on the cell table-top work surface. The robot's task is to select cubes and place them on the weight station, directly in line with the opacity sensor, to simultaneously get weight and opacity readings.

The opacity sensor was designed and implemented to measure the opacity of cubes placed within its laser beam. An electrical schematic of this device is shown in Figure 5. When unobstructed, the laser light beam passes from the laser diode on one side of the sensor, directly to the photo-resistor on the other side. When a cube is placed on the scale, the amount of light that is received by the photo-resistor is reduced due to the decreased transparency of the acrylic cube. The distorted light beam therefore alters the photo-resistor's resistance, which in turn changes the voltage output across a 1 kOhm potentiometer and a 100 Ohm resistor. The potentiometer is used instead of a resistor to effectively calibrate the voltage outputs to be between 3 and 4 Volts. The output of the voltage divider is then sent to an analog input channel in the PLC, where the signal reads "3" for 3 Volts across the resistors and potentiometer, when the photo-resistor receives no light, and "4" for 4 Volts across the resistors and potentiometer, when the photo-resistor receives the most light. The analog signal is then scaled in the PLC using Eq. 1, where $Signal_{\text{Photo}}$ is the analog signal in Volts coming from the photo-resistor.

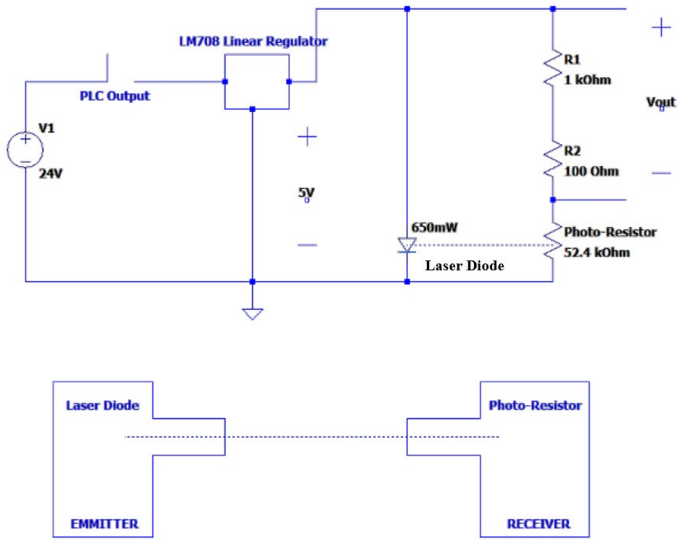

Figure 5: Schematic of Opacity Sensor

To scale the opacity sensor, a voltage measurement was recorded with no obstruction of the light beam representing maximum transmittance, then a voltage was recorded with a solid piece of aluminum blocking the light beam representing maximum opacity. Linear interpolation using those two extreme cases allowed for opacity to be estimated. The slope (32.46) and vertical intercept (27.75) were therefore found and applied to Eq. 1.

$$Opacity = Signal_{Photo} * 32.46 - 27.75 \quad \text{(Eq. 1)}$$

The resultant opacity is a percentage measurement of how much light can pass through a cube placed within the beam of the sensor.

The weight sensor used, an Arlyn 620G-4-60 gas-cylinder scale, is initiated by the PLC simultaneously with the opacity sensor, anytime the robot places a cube on the weigh station. The equation for calculating the weight of a cube is shown in Eq. 2, where weight is measured in lbs and the input analog signal to the PLC ($Signal_{\text{Scale}}$) is in Volts. Eq. 2 was derived similarly to the opacity equation. Two items of known weight were placed on the scale in turn, and $Signal_{\text{Scale}}$ was recorded. Linear interpolation of the known weight versus $Signal_{\text{Scale}}$ led to Eq. 2.

$$\boldsymbol{Weight = Signal_{Scale} * .2519 - .2570} \quad \text{(Eq. 2)}$$

The Allen-Bradly PLC was installed to control the cycle and process all of the signals coming from the robot, the opacity sensor, the quickstop wrist, and the scale. The PLC therefore compiles all of the signals, process the data, including the status of the cell and cycle time, finally sending it onward through the router.

One of the most important metrics calculated by the PLC is the OEE. As this cell is designed specifically for demonstration purposes, the OEE is altered slightly so that it is reset every 120 seconds. This decision was made so that if the OEE was affected, an onlooker of the cell could observe that change within 2 minutes of watching. The OEE was therefore calculated using Eq. 3:

$$OEE = \frac{n}{120\ seconds/t} \quad \text{(Eq. 3)}$$

where n is the total number of parts processed by the cell, and t is the expected cycle time per cube.

Percentage of good parts ($Quality\ \%$) and running average weight of the parts processed ($\overline{W}$) are the remaining metrics calculated using Eq. 4 and Eq. 5 by the PLC and displayed on the AR glasses:

$$Quality\ \% = \frac{n_{good}}{n_{good}+n_{defective}} \quad \text{(Eq. 4)}$$

$$\bar{W} = \sum_{i=1}^{n} \frac{Weight}{i} \quad \text{(Eq. 5)}$$

where n_{good} is the number of good parts and $n_{defective}$ is the number of defective parts.

At the router, all of the data from the cell is transferred from the PLC to the IIoT by Siemens MindConnect. Once on the IIoT, secure devices from all over the world can access this information.

A Python script, running on a Raspberry Pi, is used to forward the data available on the Mindsphere Server to an Android application client. The Raspberry Pi uses four concurrent processes: a main process and three child processes. The main process is used to establish a socket connection between the Android application and the Raspberry Pi. The main process then starts the three child processes. The first child process continuously receives data from MindSphere using an HTTP post request and stores the data in a memory location that's shared with the second child process. The second child process then reads the data from that shared memory location and sends it to the Android application. Once all the PLC data values are forwarded to the AR glasses via the first two child processes, an Android application immediately updates the graphical user interface (GUI) by displaying the forwarded data, as shown in Figure 6. The operator can therefore view the data from the robot cell in real time on the mobile application from any network. For this project, the GUI Android application that runs on the Vuzix M300XL AR glasses was developed using Android Studio.

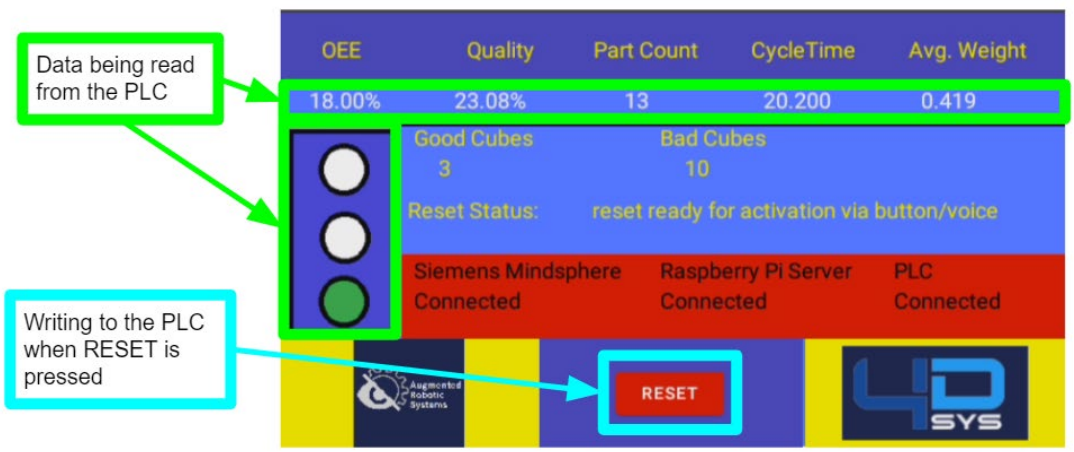

Figure 6: Android Studio HUD GUI

Since Mindsphere is limited to only reading data tags, a third child process is used to write to the PLC using a Python library called pycomm3. This allows for information to be sent to the PLC from the operator, when pressing the buttons or by voice commands on the AR glasses. Specifically, when the user requests a reset by pressing the reset button or by saying "Vuzix reset", the PLC is signaled to reset the data displayed on the GUI back to zero, all while causing the robot to move back to the home position after completing the cycle. Figure 7 shows the system diagram of the read (display data) and write functions (voice commands/buttons). Note that the read and write functions shown in this figure happen concurrently.

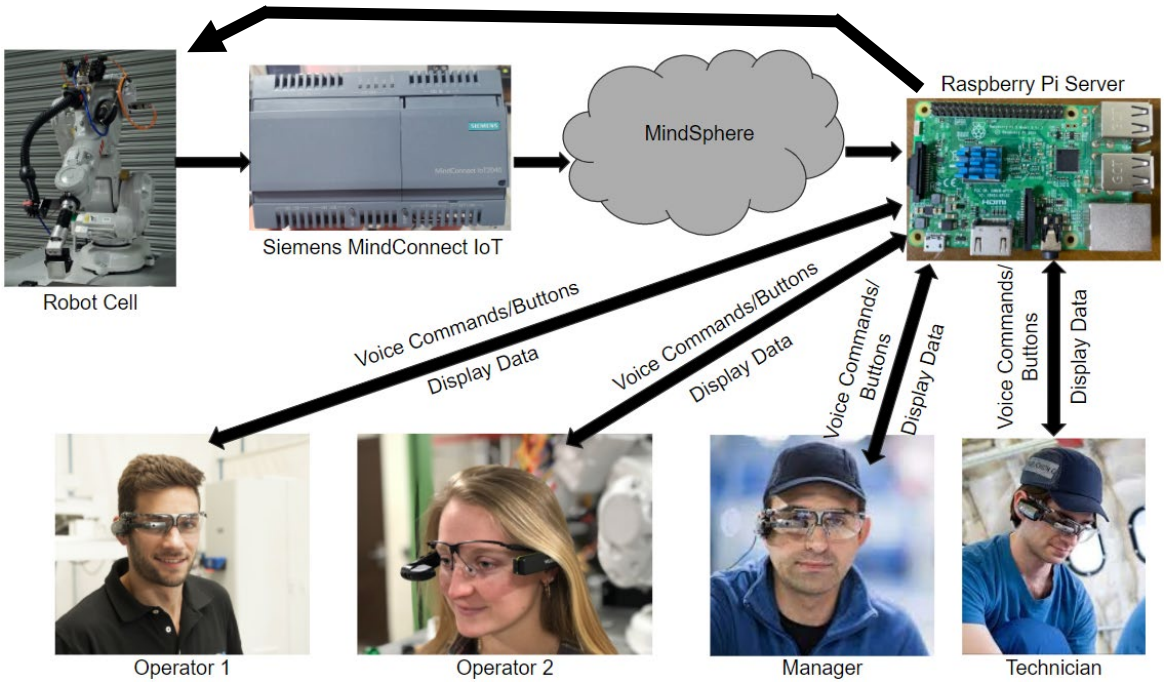

Figure 7 Read/Write PLC and MindSphere

Two Keyence safety area scanners were installed to enable humans to safely approach the robot. Each scanner was attached on an opposite corner of the cell forming a 360-degree range, surrounding the entire perimeter. Three zones, covered by these scanners, were created around the robotic cell: a safe zone, a caution zone, and a danger zone. An overview of these zones is given in Figure 8, where the center square represents the robotic cell with 2 safety scanners on opposite corners, the red area represents the danger zone, the yellow area represents the caution zone, and the green area represents the safe zone.

Human presence in the safe zone does not represent a safety concern, thus the robot's functionalities are not restricted. However, if a human enters the warning zone, the robot slows down to an operating speed of 250 mm/s. Finally, if a human enters the danger zone, and the robot has successfully reached 250 mm/s since the human entered the caution zone, the robot continues to operate at 250mm/s; however, if the robot has not reached 250mm/s by the time the human enters the danger zone, the robot will come to a full stop.

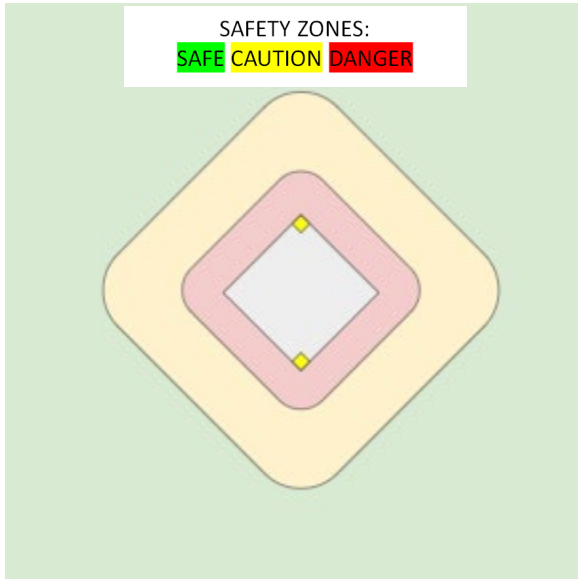

Figure 8: Safety Scanner Zones

For the safety of the operator, who can potentially position himself in the danger zone, right by a slow-moving robot, a quickstop wrist was also designed and implemented on the robot. The purpose of the quickstop wrist is to halt the robot, in case of unintentional contact of the wrist with the environment or with a human. The wrist utilizes the same electronics and basic theory as the opacity sensor, but instead of checking the amount of light that passes through a cube, it checks the amount of deflection experienced by the spring holding the gripper to the robot flange. The result is a wrist attachment that is aware of when it has come into contact with a person or object within the confines of its working envelope. Figure 9 displays the 3D CAD model of the quickstop wrist.

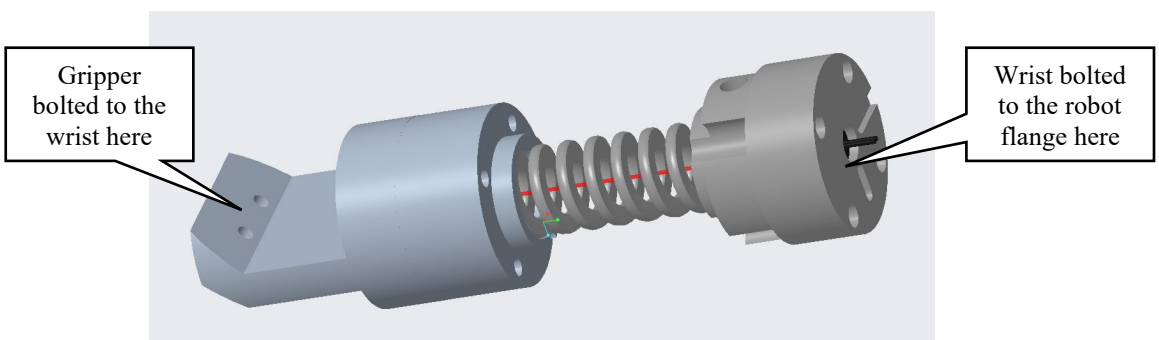

Figure 9: Quickstop Wrist CAD 3D model

One end of the wrist is attached to the robot arm flange and the gripper is attached to the other. The laser diode and photo-resistor that were used in the opacity sensor are located on either end of the wrist, with the laser beam passing between them, through the spring. As it can be seen in Figure 10, the gripper is purposefully offset by a 45-degree angle, with respect to the flange, to favor singularity avoidance in the application and to provide instantaneous deflection of the spring, thus a controlled robot stop, in case of contact.

Figure 10: Quickstop Wrist Installed on Robot

The robot is halted anytime the wrist experiences deflection, which is sensed through the varying photo-resistor's resistance caused by the distortion or complete lack of light from the laser. The electrical schematic and equation for the wrist are identical to those of the opacity sensor provided in Figure 5 and Eq. 1.

4.2 Execution of Robotic Demonstration

This project was created to prove the feasibility of using the IIoT and to replace a standard HMI with an AR HUD setup. The robot was programmed using RAPID code and the PLC was programmed using RSLogix Studio 5000. The basic decision-making process is as follows: the robot grabs a cube from either the right or left side of the cell based on a user-operated switch, then the cube is placed on the weight station to be weighed and opacity sensed. Finally, the cube is placed in the good chute if both a correct opacity and a correct weight are recorded, otherwise it is placed by the robot into the bad chute. Figure 11 shows, from left to right, a cube that would fail because it is too light and too opaque, a cube that would pass, a cube that would fail because it is too heavy, and a cube that would fail because it is too opaque.

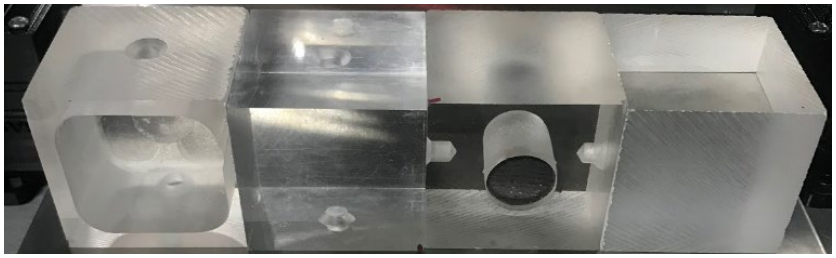

Figure 11: Acrylic Cubes

The cube sorting program would continue to run on the work cell until the stop button is pressed on the cell or the robot is reset through the AR glasses. During this continuous cycle, the PLC would collect data, accessible by the MindSphere server where it would be stored on the IIoT and accessed by the AR glasses. At any time, the operator could check the HUD on the AR glasses to see the GUI shown in Figure 6, displaying the desired manufacturing statistics. Similarly, management may display the same or similar production data through any smart-device, including smartphones and tablets. This data is easily displayed in graphs for presentation of industrial statistics over time. From these graphs, upper management can get an accurate idea of how well a machine is performing over extended periods of time. Examples of such graphs are pictured in Figure 12 and Figure 13. These examples are specific tests that were run on the demonstration cell during the testing of this project.

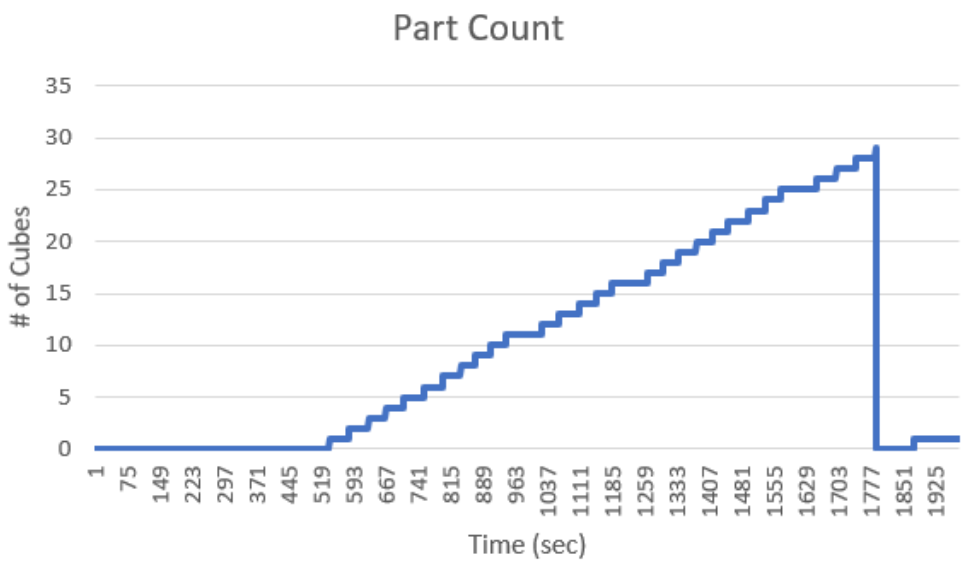

Figure 12: Captured Part Count Statistics

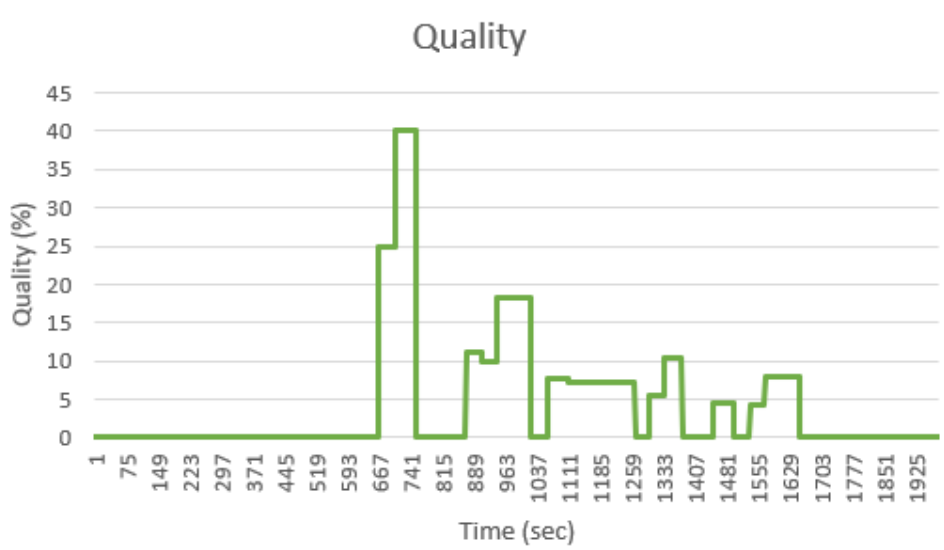

Figure 13: Captured Quality Statistics

This IIoT demonstration process was tested by running the robot for 50 cycles in a row. During the execution of this test, the system functioned as intended. The robot manipulated and sorted the cubes based on the attributes of weight and opacity, but most importantly, the data was put in the cloud and it was viewable in real time through the AR glasses.

4.3 Findings

In completing this project, it was found that a combination of either Siemens or PTC IoT packages, an Allen-Bradley PLC, and a Raspberry Pi could be used to communicate information from an older generation robotic cell to any operator over the IIoT in real time. Furthermore, it was found that the same technology can be adapted to enable any personnel to communicate information to an older generation robotic cell over the IIoT in real time. The system functioned reliably for endurance tests of 30 minutes, 1 hour, and 50 cycles. During these tests all data and statistics were collected by the Siemens MindSphere package. Statistics from the 30-minute test is displayed in Figure 12 and Figure 13.

5. Conclusion

IIoT was integrated with standard industrial sensors, custom designed sensors, an older generation robot, a modern PLC, and a pair of AR glasses. Production data was successfully accessed and displayed to a human, without the need for a traditional HMI setup. In addition, simple two-way human-robot non-contact interaction was achieved through AR. These outcomes show promise for using Siemens MindSphere and Vuzix AR glasses together on large-scale industrial operations. The proof of concept presented in this paper validates the opportunity for companies to join Industry 4.0, independent of the type of data, technology, and age of the system.

In addition, this paper proves that an old system can be updated to reap the advantages of IIoT information networks. The project team was tasked with using a robot that was designed and manufactured before the standard integration of IoT in industrial settings, and through research proved the feasibility and merit of upgrading a dated robot to the age of Industry 4.0.

By integrating IIoT-compatible devices at every step of the manufacturing process, companies can collect massive amounts of data both instantaneously and autonomously, creating a network of information that can then be data-mined to assist in making specific decisions. These decisions can range from immediate manufacturing maintenance adjustments such as rerouting production lines to exclude a broken machine, to very long-term investment strategy moves based on overall efficiency of production lines.

Acknowledgement

This work is supported by 4D Systems LLC, 4130 Market Pl, Flint, MI 48507.

References

AREA. (2019, 4 24). *What is Assisted Reality – and How Can You Benefit from It?* (AREA) Retrieved January 30, 2021, from https://thearea.org/what-is-assisted-reality-and-how-can-you-benefit-from-it/

Coon, J. (2018, May 31). *Assisted Reality: What it Is and How it Will Improve Service Productivity*. (PTC) Retrieved January 30, 2021, from https://www.ptc.com/en/blogs/service/what-is-assisted-reality

Crnjac, M., Veža, I., & Banduka, N. (2017). From Concept to the Introduction of Industry 4.0. *International Journal of Industrial Engineering and Management, 8*(1), 21-30.

Cronin, C., Conway, A., & Walsh, J. (2019). Flexible manufacturing systems using IIoT in the automotive sector. *Procedia Manufacturing, 38*, 1652-1659.

Fernández-Caramés, T. M., & Fraga-Lamas, P. (2018). A Review on Human-Centered IoT-Connected Smart Labels for the Industry 4.0. *IEEE Access, 6*, 25939-25957.

Gnoni, M. G. (2020, January 15). *Integrating IoT Technologies for an "intelligent" Safety Management in the Process Industry*. Retrieved from Science Direct: https://reader.elsevier.com/reader/sd/pii/S2351978920305898?token=AACB7D959D24A8CE3163F7B79A2E630A5E089E2D3D8C914781B36D4604BF1AC628544833BCF9C2AD5575C7C8B97826D4&originRegion=us-east-1&originCreation=20211003222740

Knell, T. (2019). *The growing trend of 'retrofitting'*. (MaschinenMarkt) Retrieved January 30, 2021, from https://www.maschinenmarkt.international/the-growing-trend-of-retrofitting-a-789245/

Monostori, L. (2014). Cyber-physical Production Systems: Roots, Expectations and R&D Challenges. *Procedia CIRP 17* (pp. 9-13). Procedia.

Neugebauer, R., Hippmann, S., Leis, M., & Landherr, M. (2016). Industrie 4.0- Form the perspective of apllied research. *49th CIRP conference on Manufacturing systems* (pp. 2-7). CIRP-CMS.

Rose, K., Eldridge, S., & Chapin, L. (2015). The internet of things (IoT): An Overview–understanding the issues and challenges of a more connected world. *Internet Society*, 1-80.

Sanneman, L. (2020, October 27). *Computer Science > Robotics*. Retrieved from Cornell University: https://arxiv.org/abs/2010.14537

Tao, F., & Zhang, M. (2017). Digital Twin Shop-Floor: A New Shop-Floor Paradigm Towards Smart Manufacturing. (pp. 20418-20427). IEEE Access.

Wan, J., Tang, S., Shu, Z., Li, D., Wang, S., & Imran, M. (2016). Software-Defined Industrial Internet of Things in the Context of Industry 4.0. *IEEE Sens J., 16*((20), 7373-7380.

Biography

Erik N. Finley is a student of mechanical engineering with minor in general business and concentration in robotics at Lake Superior State University, Sault Ste. Marie, MI, USA. He has contributed to research and development projects, as well as technical patents while working with Continental Automotive. His research interests include manufacturing, simulation, optimization, autonomous transportation, and sustainable industrial practices.

Sadie M. DeWildt is a student of electrical engineering with minor in mathematics and concentration in robotics at Lake Superior State University, Sault Ste. Marie, MI, USA. She has supported Halla Mechatronics with technical research. Her research interests include robotic and control systems, sustainable energy, and autonomous transportation.

Zachary A. Rougeau received the B.S. degree in Computer Science at Algoma University, Sault Ste. Marie, ON, Canada, in 2015. He is currently a student of Computer Engineering with minor in Mathematics at Lake Superior State University, Sault Ste. Marie, MI, USA. His research interests include software engineering, embedded systems, robotics engineering, and control systems.

Nicholas A. MacArthur received the B.S. degree in electrical and mechanical engineering with concentration in robotics from Lake Superior State University, Sault Ste. Marie, MI, USA, in 2020. He is currently an Advanced Automated Systems Engineer. His research interests include design of automated industrial systems, processing of rare materials such as molybdenum, niobium, and titanium, and assembly of aeronautical systems for NASA, SpaceX and the US Department of Defense.

Edoardo I. Sarda received the B.S. degree in mechanical engineering from Lake Superior State University, Sault Ste. Marie, MI, USA, in 2012, the M.S. and the Ph.D. degree in ocean systems engineering from Florida Atlantic University, Boca Raton, FL, USA, in 2016. He is currently an Assistant Professor of robotics engineering at Lake

Superior State University, Sault Ste. Marie, MI, USA. His research interests include autonomous vehicles, mobile robotics, human-robot collaboration, automated systems and modern control.