Recyclable Materials Flows in Municipal Solid Waste System in Terengganu: An Application of Material Flow Analysis

Fatin Alias, Latifah Abdul Ghani, Rahaya Md Jamin, Siti Aisyah Saat
Zikri Muhammad, Jumadil Saputra
Faculty of Business, Economics and Social Development
Universiti Malaysia Terengganu
21030 Kuala Nerus, Terengganu, Malaysia
fatinalias113@gmail.com; latifah.ghani@umt.edu.my; rahaya.jamin@umt.edu.my;
s.aisyah@umt.edu.my; zikri@umt.edu.my; jumadil.saputra@umt.edu.my

Nora'aini Ali
Faculty of Ocean Engineering Technology and Informatics,
Universiti Malaysia Terengganu,
Kuala Nerus 21030, Terengganu, Malaysia
noraaini@umt.edu.my

Abdul Talib Bon
Department of Production and Operations
Universiti Tun Hussein Onn Malaysia
86400 Parit Raja, Johor Malaysia
talibon@gmail.com

Abstract

Municipal solid waste covers 64% of the overall waste composition in Malaysia. The highest waste found in the municipal solid waste was household waste, from which 70-80% of the total waste consisted of recyclable materials disposed at the landfills. Solid waste management which focuses on the recovery potential of recyclable materials found at the landfills helps in restoring environment by reducing the volume of waste at the landfills, and by improving economic market of recyclable materials. Thus, this study aims to identify the value of input and output flows of recyclable materials in municipal solid waste (MSW) system at the generation, collection and transportation, separation, and final disposal phase. The application of Material Flow Analysis (MFA) was suitable as the supporting tool in order to visualize the flows of the recyclable materials throughout the four phases in the MSW system. The primary data for the MFA were obtained from field observation, in-depth interviews and literature review, covering eight districts of Terengganu. The results showed that the highest input flow of recyclables materials in the MSW system was from household waste flow. The total flow of recyclable materials was 1.54 kilotonnes per year while the output flow of recyclable materials being recycled was only 6.92 kilotonnes per year from the overall flow of the system. It is suggested that the partnership between private sectors and local authority should also involve intensive promotion of the 3Rs activities to encourage recycling activities among people in Terengganu.

Keywords
Material Flow Analysis (MFA), Recyclable Materials Flows, Municipal Solid Waste System, Solid Waste Management, Environment

1. Introduction

In developing countries, the growth of the economy, population, and standard of life has increased solid waste generation. It is estimated that the current level of global solid waste generation is about 2.01 billion tonnes per year with the per capita waste generation rate per day ranging from 0.11 kg to 4.52 kg, and it is expected to increase to 2.2 billion tonnes per year by 2025 (World Bank, 2020). Meanwhile, the total solid waste generation in Malaysia is 33,130 tonnes per day, and expected to increase to 49,670 tonnes per day by 2030 (Bashir et al., 2019). From these sums, approximately 70% was reported to have been collected, and approximately 95% of the collected wastes were disposed in landfills. As the amount of solid waste generated continues to rise, the important task of managing solid waste to achieve a sustainable solid waste management with appropriate alternative solutions at the generation, collection, treatment, and disposal phase becomes more difficult for the government (Innocent et al., 2015).

In Malaysia, there is a high potential for recyclable materials; up to 80% of municipal solid waste generated could be recycled, and yet 65% of them are dumped at the landfills. Solid waste management focused on the recovery potential of recyclable materials found at the landfills helps in restoring the environment by reducing the volume of waste at the landfills and by improving economic market of recyclable materials (Anwar et al., 2014). For implementation purposes, the government published the Solid Waste Management and Public Cleansing Act (Act 672) in 2007. On September 1, 2011, Act 672 became effective in the states of Perlis, Kedah, the Federal Territory of Kuala Lumpur and Putrajaya, Pahang, Negeri Sembilan and Melaka (Haslinda and Harlida, 2015). Beginning September 1, 2015, all premises were required to separate waste at the source as part of the Separation at Source (SAS) campaign. This implementation is in accordance with regulations enacted under the Solid Waste and Public Cleansing Management Act 2007 (Act 672). Composting, in addition to recycling, has been introduced to reduce the amount of waste disposed of at landfills. From this campaign, it is clear that the performance has steadily improved from 2015 to 2017 as a result of various efforts and campaigns on waste separation at the source. It is expected that the initiative will be aggressively promoted in order to achieve a 30% recycling rate by 2020 (Khalid et al., 2019).

Malaysia's recycling rate in 2019 has surpassed the target of 28.1%. Following the government's initiative of solid waste separation at the source, this rate increased by 3.5 percentage points from 24.6% in 2018 for states implementing Act 672. South Korea and Singapore had the highest recycling rates in Asia, at 53.7% and 34.4% respectively (Compendium of Environment Statistics Malaysia, 2020). This demonstrates that the number of recycling practices is increasing and that the previous goal has been met. However, in terms of knowledge and awareness, some Malaysians still remain behind. It is vital to provide financial incentives to the public in order to promote public awareness and waste segregation practices (Izzati et al., 2020).

The amount of recyclables materials disposed in the landfills keeps on increasing. The total municipal solid waste collection in Kuala Terengganu also showed a significant increase from 8.7 tonnes per day in 1970 to 154 tonnes per day in 2005. The Kuala Terengganu City Council (MBKT) also recorded a total of 300 tonnes of solid waste collected per day in clean-up operations in the city (Nawawi et al., 2017). In 2019, it was reported that the generation of solid waste was up to 500 tonnes per day in Terengganu compared to that of developed states like Selangor with 7000 tonnes per day. Although the amount of waste generated is still at the moderate level, a good waste management system is important (Haneeyzah, 2019). Due to lack of awareness, people choose to dump the solid waste at the landfills as the final disposal instead of reusing and recycling the waste. Futhermore, practicing separation at the source is not mandatory as Terengganu does not implement Act 672. Hence, a clear understanding of waste system helps reduce the burden to the local authority. If waste is managed systematically, less waste will be collected, and at the same time, fewer resources have to be expended to collect the waste and to transport them to the landfills.

A variety of analytical tools and methods are used to help the decision-making process in waste management system. One of them is the model of system assessment, Material Flow Analysis (MFA) (Dragana et al., 2017). Material Flow Analysis is used to analyse the flux of different materials through a defined space and within a certain time (Achie et al., 2014). It was formed through the mass balance model of STAN. MFA is proven to be a suitable tool for early recognition of environmental problem solver. MFA was chosen as a tool in this system as it evaluated the input and output flows of the recyclables materials in the MSW system of Terengganu. This study provides a better understanding in managing the flow of recyclable materials in the MSW system. Hence, this study helps improve the existing municipal solid waste (MSW) management to a systematic system with an emphasis on the separation and recycling phase.

1.1. Objectives

This study focused on identifying the total input and output flows of recyclables materials in the municipal solid waste (MSW) system at the generation, collection and transportation, separation, and final disposal phase in Terengganu using Material Flow Analysis (MFA). From the results, the alternative solutions in managing the recyclable waste for sustainable solid waste management were recommended.

2. Literature Review

In overseeing waste management system, there is a variety of analytical tools and methods used to aid decision-making. Material Flow Analysis (MFA), as a system assessment model, is one of them (Dragana et al., 2017). Material Flow Analysis is a technique for analyzing the flux of various materials through a defined space and within a specific time frame (Achinas et al., 2014). It was created using STAN's mass balance model. MFA has been shown to be an effective tool for early detection and resolution of environmental problems. Many studies are conducted using Material Flow Analysis in solid waste management. A study conducted by Nesli (2020) highlighted the application of MFA in identifying the flows of waste streams in the current municipal solid waste management of Ankara. In planning the sustainable waste management, MFA was used as a tool to view the complete flows of waste, carbon and nitrogen in Banjalaka (Dragana et al., 2019). Besides that, MFA is also applied in monitoring the waste bank activities in Indonesia in order to improve the efficiency of the activities (Hafizhul et al., 2019). In Terengganu, the application of MFA was used in identifying the input and ouput of household waste (Latifah et al., 2020). In terms of recycling, MFA and LCA were applied to study the flow of waste paper recycling in China (Manzhi et al., 2020). The estimation of actual recycling rate and final disposal rate of MSW was measured using MFA method (Giljong et al., 2019).

3. Materials and Methods

3.1. Description of Study Area

Terengganu is a state located in the East of Peninsular Malaysia. Terengganu comprises of eight districts: Kuala Terengganu, Kuala Nerus, Marang, Dungun, Hulu Terengganu, Kemaman, Setiu and Besut (UPENT, 2019). Table 1 details the infomation of Terengganu. Terengganu has been recognized as a candidate among other states for this research as it demonstrates an intensive and committed involvement in promoting the tourism industry, and recycle programme of domestic waste. In addition, based on the waste to wealth concept, the high amount of domestic waste generated can be used to develop green technology.

Table 1: Description of Terengganu

Population	1.244 million
Average Annual Growth Rate	1.3
Total area	1295.757.6 ha
Density	564.6 per km².
Coordinates	4º45'N 103º0'E
KDNK per capita	30,933
Labour force	447,200
Major economy	Oil and gas, agriculture, fishing, tourism

Source (UPENT, 2019)

3.2. Data Collection

In quantitative methods, primary and secondary data were used for the framework of MFA system. The primary data were obtained from in-depth interviews with the person in charge from the recycle centers and local officers from District Council of Terengganu. Besides that, field observations of the selected landfills in Terengganu were also conducted in order to have a clear picture of the municipal solid waste system. The interview session with detailed questions was conducted for the analysis of the system using MFA, focusing on the amount of waste generated and collected, sources of the wastes, types of waste composition, the flow system of municipal solid waste, and current rate of recycling activity.

Meanwhile, the secondary data were collected from the organization, government departments and journals from previous studies. The collection of data included the eight districts in Terengganu. In order to quantify the amount of waste generated and collected, the data were obtained from City Council of Kuala Terengganu, District Council of Marang, District Council of Besut, District Council of Setiu, City Council of Kemaman, District Council of Hulu Terengganu and District Council of Dungun. Besides that, the data of population and economy in Terengganu were

obtained from Unit Perancangan Ekonomi Negeri Terengganu (UPENT). Table 2 below presents the item of data collected with the corresponding sources of data.

Table 2. Data of waste collected

Item	Sources
Total municipal solid waste generation and collected	Kuala Terengganu Town Council (MBKT), Dungun Municipal Council (MPD), Kemaman Municipal Council (MPK), Marang District Council (MDM), Hulu Terengganu District Council (MDHT), Besut District Council (MDB), Setiu District Council (MDS); 2019
Total population	Unit Perancangan Negeri Terengganu, 2019
Rate of recycling and composting	Latifah et al., 2020
Types of municipal solid waste (MSW) composition	Solid Waste and Public Cleansing Management Cooperation (SWCorp), 2019
Total recyclable materials	Solid Waste and Public Cleansing Management Cooperation (SWCorp), 2019

3.3. Data Analysis

The application of Material Flow Analysis (MFA) in this study was relevant to determine the flows of recyclable municipal solid waste in the system and the alternative ways to systematically manage the goods or materials. By using MFA, the complete picture of waste flow, substances in the system, and waste disposal can be identified. The STAN-UNBERTO software and Microsoft Excel were used to obtain the procedure and calculate the amount of waste in 2020. The model of MFA-STAN is built with system boundaries, processes and flows. This study used MFA methodology that consisted of the following steps (Brunner and Rechberger, 2016):

- Defining the object and goal of the study.
- Determining relevant substance and system boundaries, processes and goods.
- Defining flows of goods and substance.
- Balancing the inputs, outputs, and stock through the processes.
- Providing schematic and interpretation results.

Several studies used MFA to quantify waste flows and waste substance. MFA assesses the flows and stocks of materials in a system defined by a spatial and temporal scale (Brunner and Rechberger, 2016). According to the mass balance principle, the mass of all input equals the mass of all outputs of this process plus storage as illustrated through Eq. 1 (Brunner and Rechberger, 2016):

$$\sum_{k1} \dot{m}\, input = \sum_{k0} \dot{m}\, output + \dot{m} storage \quad (1)$$

Where $k1$ and $k0$ represent input and output flows, respectively, and $\dot{m}$ represents the flow or flux. Figure 1 shows the framework of recyclable material flows in municipal solid waste system starting from generation to disposal phase.

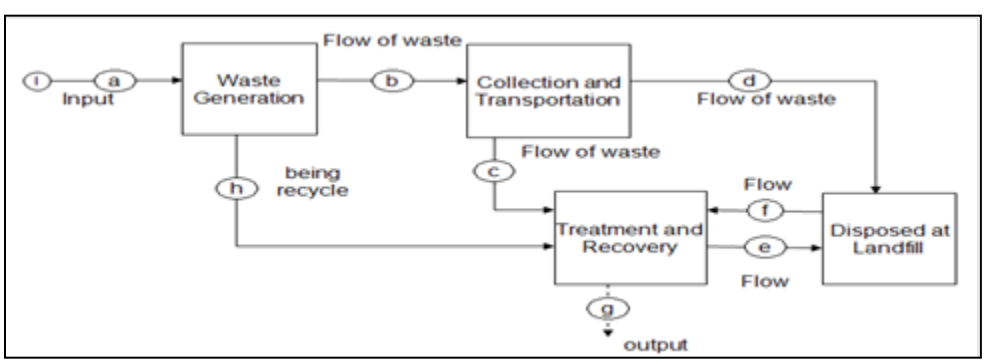

Figure 1. Framework of recyclables materials flow in municipal solid waste system

Figure 2 ilustrates the flow of recyclable materials from the generation to the recycling phase. From the generation phase, the recyclable material flows came from the sources of the household, commercial and institutional premises, industrial sites, and park cleaning. Some of them were separated and recycled by the household before being sent to the bin as storage. At the bin, informal scavengers collected some of the recyclable materials to directly sell them at recycling centres. Then, the remaining waste was collected and transported by the local authority using lorries according to the scheduled waste collection. At the final disposal, the waste was transferred to the landfills to be disposed. The recycling activity in this system occurred in two ways: it was initiated from households or contributed by informal waste pickers or scavengers at the landfills. At the landfills, scavengers separated the recyclable materials into plastic, glass, paper and metal. Then, the recyclable materials were sorted and sent to the recycle centre nearby. Informal waste pickers and landfill scavengers contributed to the recycling activity as the materials were exported as a raw material and processed to a new product.

Figure 2. Picture of Municipal Solid Waste (MSW) system from the generation to recycling phase in Terengganu

4. Results and Discussion

Table 3 shows the generated MSW by its composition in 2020 in Terengganu. The estimation of generated MSW was about 386.4 ktons per year in 2020, with the rate of generation per capita being about 0.9 kg to 1.12 kg per day since the collection was done daily. From the amount of waste generated, the recyclable materials contributed 155.72 ktons per year. Food waste dominated the highest percentage of MSW composition with 37.6%, followed by plastics and paper with 22.6% and 8.1%, respectively. The assumed amount of food waste was 133.7 ktons per year. The recyclables materials consisted of plastics, paper, metal, and glass. Food waste was considered as recyclable materials

that can be used as compost. In Terengganu, composting is produced in small quantities by the residents instead of for commercial value. The commercial value for composting can be the products of organic fertilizer.

Table 3. Composition of municipal solid waste (MSW) and the amount generated in Terengganu

No.	Types of waste	Percentage (%)	Amount of waste (ktons/year)
1	Food waste	34.6	133.7
2	Plastics	22.6	87.33
3	Paper	8.1	31.30
4	Metal	3.2	12.36
5	Rubber	1.1	4.25
6	Glass	1.7	6.57
7	Textiles	3.6	13.91
8	Wood	1	3.86
9	Diapers	12.8	49.46
10	Garden waste	4.5	17.38
11	Others waste	6.8	26.28

Figure 3 presents the pie chart of the percentage of materials being recyclable recycled in Malaysia based on the statistics by the Solid Waste and Public Cleansing Management Cooperation (SWCorp) (2019). Paper had the highest proportion of materials being recyclable recycled, followed by plastics. E-waste that consisted of discarded waste from electronic devices was recycled at the percentage of 10%. There were about seven categories of recyclable materials being recycled in Malaysia. In this study, the four main recyclable materials were collected and analyzed to represent the system of recycling materials in Terengganu.

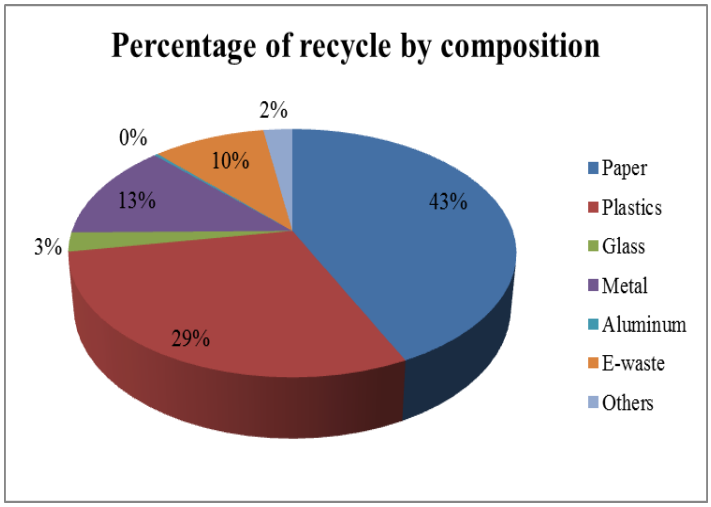

Figure 3. The percentage of recycled materials by its composition in Malaysia (Solid Waste and Public Cleansing Management Cooperation (SWCorp), 2019)

Table 4. Input and output flow of recyclable materials in MSW system

Input	Value (kton/y)	Output	Value (kton/y)
Recyclable material generation	155.72	Disposed at landfills	127.57
Household generation	74.75	Sorting for recycling	1.50

Commercial and institutional generation	46.72	Recyled by informal waste picker	4.01
Industrial	6.23	Disposed at landfill and being recycled by landfill scavengers	4.01
Cleaning (Park and roads)	28	Disposed at landfill and being recycled by landfill scavengers	4.01
Bin (storage)	154.55	Recycling by informal pickers	1.54

Table 4 presents the value of input and output flow of recyclable materials invovled in the MSW system. The input and output flows were calculated in kilotonnes per year. Input flows consist of waste generated from the sources, including household, commercial and institutional, industrial and cleaning. The output flows consist of the amount of recyclable materials flow being recycled either from the households, informal waste picker and landfill scavengers.

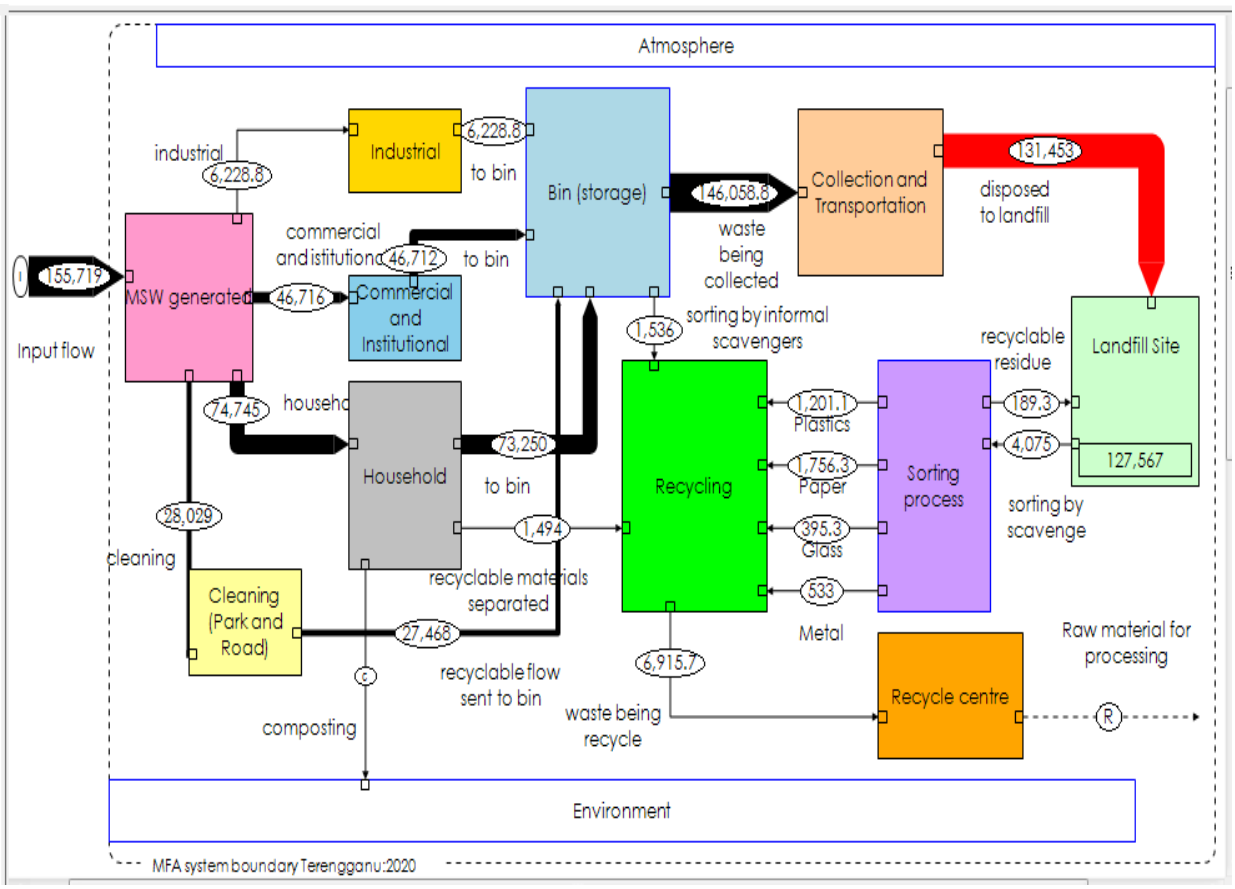

Figure 4 Material Flow Analysis (MFA) system for recyclable materials flow in MSW system of Terengganu (2020)

The collected data were analyzed and presented through Sangkey diagram as illustrated in Figure 4. The MFA for recyclable materials flow in MSW system consisted of four main subsystems, starting from generation to disposal while using the parameter of tonnes per year for the calculated data. The data involved for year 2020 covered the eight districts of Terengganu. From the illustrated diagram, it was assumed that the total input of recyclable materials into the system was up to 160,000 tonnes per year. The input flow from the household waste had the highest value of recyclable materials with 74,745 tonnes per year. Recyclable materials input from commercial and institutional sites contributed to the second highest value, with 45,000 tonnes per year. The total output of recyclable materials were from the households, informal waste pickers and landfill scavengers recycling activities that separated the waste into

paper, plastics, glass and metal. The output flows of recyclable materials being recycled by the household was only about 1,490 tonnes per year.

Meanwhile, the informal pickers that collected recyclable materials from the bin recycled the waste, amounting to 1,500 tonnes per year. Landfill scavengers dominated the recycling activity in this MSW system. They conducted this activity as their living income. Paper contributed to the highest output of recyclable waste being recycled with 43.1% or 3,496 tonnes per year, followed by plastics with 29.5%. The recyclable materials disposed at the landfill without being treated or recovered were 127,567 tonnes per year, meaning that 87% of the total waste generated were disposed at the landfills. This stock amount of recyclable materials remaining as disposal waste at the landfill is higher. Informal recyclers consisting of landfill scavengers and informal waste pickers were the main actors in contributing the recycling activities. The recycling activity was recorded at 6.1% which was low. The rate of recycling activity was still low. The amount of recyclable materials collected that consisted of plastics, paper, glass and metal were about 6,915 tonnes per year. Recyclable materials collected were used for the market users, and it was delivered to the recycle centers for further processes. In table 5, this study summarize the issue and proposed recommendations.

Table 5. Issues and Proposed Recommendations

Issues	Proposed Recommendations
Separation at Source (SAS) campaign. This implementation is in accordance with regulations enacted under the Solid Waste and Public Cleansing Management Act 2007 (Act 672). In Terengganu, it is not mandatory to practice (SAS) campaign.	Improvement of Act and Legislation By designing better strategies and improving the existing Act to help motivate and educate the public on certain matter.
Compositon of municipal solid waste in Terengganu is dominated by food waste, and followed by plastic waste. Plastics contributed to the second highest of recyclable materials due to the economic growth and daily activities. Improper management of plastics waste can give harm to the environment.	Reducing Single-Use Plastics In 2011, No Plastic Bag Day (NPBD) campaign was launched by the Ministry of Domestic Trade Cooperatives and Consumerism (MDTCC). This campaign was aimed to reduce the single-use plastics in Malaysia. In line with this campaign, through a strategic plan for 2019-2023 by PSUK under the 5th core, local government aimed to design and implement policies to encourage the reduction of single-use plastics and polystyrene. This strategy will help reduce the disposal of plastics at the landfills. This campaign complies with the aim of achieving sustainable solid waste management and reducing the use of plastics.
Poor solid waste disposal behavior among people directly inhibits recycling activities. Malaysian households still lack the practice of segregating solid waste. One of the reasons to clarify this is the lack of awareness within the households on the importance of waste separation and recycling activities (Choong et al., 2018). Informal recycler sector dominated the recycling practices in Malaysia. Households should support this recycling activity directly since the highest generation of recyclable materials comes from household source.	Participation of Public and Stakeholders The participation of the public and stakeholders in municipal waste management plays an important role in ensuring the operational efficiency of the entire system. Despite the launch of resource separation initiatives under the Solid Waste and Public Cleansing Management Act 2007 (Act 672) in 2015, the participation of public in recycling helps reduce the volume of recyclable materials at the landfills as the higher contribution of recyclable material waste comes from households. Educating people on waste separation, including details on waste management systems and the appropriate waste disposal practices, is also important to increase their awareness. Educating them from the young age helps to ensure that they are aware of the contribution of future waste (Zaipur and Rahman, 2017).
A survey conducted in Terengganu focusing on food waste recycling indicated that respondents were interested to initiate a food waste recycling business if the operation and maintenance were easy to conduct. They were aware that from recycling the food waste, they could generate an income (Nawawi et al., 2017), but they could not commit in conducting the activity as they thought that it required time and space, and that the recycling centre was far from their house. The study found that time constraint, limited space and bins, and the distance from home to the recycling facilities were the influencing factors that limited the public participation in segregating and recycling the waste (Nur, Sabrina and Latifah, 2015).	Promoting 3Rs Measures Intensively The goal of 3Rs actions is to encourage 3Rs activities such as reducing, reusing, and recycling. The concept of 3Rs has been introduced as the most applicable approach to waste management and MWM practices. Enforcement of regulations is another aspect to ensure that rules are adhered to. Promoting the recycling activities with interactive activities and giving some incentives to people who participate can attract their involvement. Organizing a recycling programme from door to door can encourage them to participate in recycling. Futhermore, recycling activities give benefits to others parties by lessening the amount that the industry needs to operate and maintain its quality.

5. Conclusion

The total input and output flow of recyclable materials in MSW system could be calculated and visually presented by using STAN-MFA. The MSW has a good potential to recover recyclable materials. Hence, the authority should emphasize in waste minimization and improving recycling. The task of recycling was mostly taken by scavengers, and this should be supported actively by households by practicing separation at the sources. In order to improve the highlighted issues, the proposed recommendation can be considered by the local authority to achieve a sustainable solid waste management.

Acknowledgement

The authors would like to express their gratitude to Research Management and Innovation Centre (RMIC) of Universiti Malaysia Terengganu for the financial support through the project (UMT TAPE via Vote: 55123).

References

Alias, Latifah, Mariani and Sabrina, Solid Waste Minimization in Malaysia, *Pertanika Journal of Scholarly Research Review*, vol.4, no.3, pp. 26-41, 2018

Anwar, Habib, Haslenda, I., Ahmed and Ramli Municipal Solid Waste Management and Potential Revenue from Recycling in Malaysia *Journal Modern Applied Science,* vol. 8, no. 4, pp. 1-13, 2014

Chira, Taweep and praj-ya Material flows analysis of plastic in Thailand *Journal of Thermal Science*, vol. 22, No. 6A, pp. 2379-2388, 2018

Department of Statistics Malaysia (DSM) Press Release, Compendium Of Environment Statistics, Malaysia 2020 Friday, 27 November 2020, www.dosm.gov.my

Dragana, H., Drazenko, Ljiljana, P. and Olivera Using Material Flow Analysis for Waste Management Planning *Journal of Environmental Studies,* vol. 28, No. 1, pp. 1-11,2017

Hanneeyah, Perkemas sistem pengurusan sampah, 28 Oktober, 2019 https://www.bharian.com.my/berita/nasional/2019/10/622444/perkemas-sistem-pengurusan-sampah

Innocent. Jereme, C.,Begum, Basri and Md., Assessing problems and prospects of solidwaste management in Malaysia, *Journal of Social Science and Huminities*, vol.10, No. 2, pp. 70-87, 2015

Izzati, A., Shafie and Ezlin Review on Current Municipal Solid Waste Management in Malaysia *International Journal of Disaster Recovery and Business Continuity*, vol.11, no. 1, pp. 2230-2242, 2020

Khairi, Iga, S., Indriyani and T., material flow analysis of waste bank activities in indonesia: case study of medan city Indonesian *Journal of Urban and Environmental Technology* ,vol. 3, no. 1, pp.28 - 46, 2019

Khalid, Faridah, J.,Nor, Rohaslinda M.,Jabar and Hafizam Community Participation and Performance of Waste Segregation Program in Malacca: Towards Sustainable Waste Management, MATEC Web of Conferences, vol. 266, pp.1-7, 2018

Latifah, Fatin ,Zalina and A., Application Of Material Flow Analysis For Household Waste Management In Terengganu, *International Journal of Advanced Science and Technology*, vol. 29, No. 9, pp. 1807-1815, 2020

Manzhi, Tan , Zhang , G., Chen, Fu and Luan, Waste paper recycling decision system based on material flow analysis and life cycle assessment: A case study of waste paper recycling from China *Journal of Environmental Management* vol. 255, pp. 1-16, 2020

Nawawi, Sopiah, Ramli and N., Attitude and Expectation: Food Waste Recycling as a Business Opportunity in Terengganu, *Pertika Journal Social Science and Huminities* vol. 25, pp. 65 – 74, 2017

Nur, Sabrina and Latifah, Community participation on solid waste segregation throughrecycling programmes in Putrajaya, *Procedia Environmental Sciences* vol.30, pp.10-14. 2015

Oliver and Rechberger, Material Flow Analysis with Software STAN *Environmental Informatics and Industrial Ecology* vol. 978, No.3, pp. 440-447, 2008

Unit Perancangan Ekonomi Negeri Terengganu (UPENT), Isi Data Asas Negeri Terengganu, 2019 http://upen.terengganu.gov.my/index.php/2018

World Bank 2020 Pejabat Setiausaha Kerajaan Terengganu (PSUK) Pelan Strategik 2019-2023 suk.terengganu.gov.my/files/Pelan%20Strategik%20PSUKT%202019-2023_new.pdf

Yiing and Latifah Solid waste management transformation and future challenges of source separation and recycling practice in Malaysia *Resources, Conservation and Recycling* vol. 116, pp. 1-14, 2017

Zaipul and Rahman, Policies, challenges and strategies for municipal waste management in Malaysia, *Journal of Science, Technology and Innovation,* vol. 3, no. 1, pp. 18-22 2017

Biographies

Fatin Alias is an undergraduate student who currently pursues her Master of Social Science in Social Studies (Policy and Environmental Management) at the Universiti Malaysia Terengganu. She has published one journal article. Her research interests include material flow analysis, and solid waste management.

Latifah Abdul Ghani is a lecturer at the Faculty of Business, Economics and Social Development, Universiti Malaysia Terengganu, 21030 Kuala Nerus, Terengganu, Malaysia.

Rahaya Md Jamin is a lecturer at the Faculty of Business, Economics and Social Development, Universiti Malaysia Terengganu, 21030 Kuala Nerus, Terengganu, Malaysia.

Siti Aisyah Saat is a lecturer at the Faculty of Business, Economics and Social Development, Universiti Malaysia Terengganu, 21030 Kuala Nerus, Terengganu, Malaysia.

Zikri Muhammad was born in Terengganu, Malaysia. He received the Bachelor's degree in business administration from Universiti Putra Malaysia in 1999, the M.A. degree from Universiti Sains Malaysia, and the Ph.D. degree in geography from Universiti Kebangsaan Malaysia. From 2012 to 2016, is a Senior Lecturer with the School of Humanities, Universiti Sains Malaysia for five years. He is currently a Senior Lecturer with the Faculty of Business, Economics and Social Development, Universiti Malaysia Terengganu. His research interests include urban geography, sustainable development, quality of life, and local government.

Jumadil Saputra is a PhD holder and works as a senior lecturer in the Department of Economics, Faculty of Business, Economics, and Social Development, Universiti Malaysia Terengganu, Malaysia. He has published 207 articles Scopus/ WoS indexed. As a lecturer, he has invited as a speaker in numerous universities, the examiner (internal and external), the reviewer for article journal and proceeding, the conference committee, journal editorial board, and others. He is a professional member of the International Business Information Management Association (IBIMA), Ocean Expert: A Directory of Marine and Freshwater Professional, and Academy for Global Business Advancement (AGBA). His research areas are Quantitative Economics (Microeconomics, Macroeconomics, and Economic Development), Econometrics (Theory, Analysis, and Applied), Islamic Banking and Finance, Risk and Insurance, Takaful, i.e., financial economics (Islamic), mathematics and modelling of finance (Actuarial). His full profile can be accessed from https://jumadilsaputra.wordpress.com/home-2/.

Nora'aini Ali is a lecturer at the Faculty of Ocean Engineering Technology and Informatics, Universiti Malaysia Terengganu, 21030 Kuala Nerus, Terengganu, Malaysia.

Abdul Talib Bon is a professor of Production and Operations Management in the Faculty of Technology Management and Business at the Universiti Tun Hussein Onn Malaysia since 1999. He has a PhD in Computer Science, which he obtained from the Universite de La Rochelle, France in the year 2008. His doctoral thesis was on topic Process Quality Improvement on Beltline Moulding Manufacturing. He studied Business Administration in the Universiti Kebangsaan Malaysia for which he was awarded the MBA in the year 1998. He's Bachelor degree and diploma in Mechanical Engineering which his obtained from the Universiti Teknologi Malaysia. He received his postgraduate certificate in Mechatronics and Robotics from Carlisle, United Kingdom in 1997. He had published more 150 International Proceedings and International Journals and 8 books. He is a member of MSORSM, IIF, IEOM, IIE, INFORMS, TAM and MIM.