Supply Chain Distribution Network Analysis of Two Cable Manufacturers

Ayyagari Venkata Ramani
Master of Engineering Management
Lawrence Technological University
Southfield, MI 48075, USA
nayyagari@ltu.edu

Abstract

Supply chain performance can be determined by few factors like operating capital, inventory and time. However, one of the fundamental factors considered while optimizing a supply chain is the transportation cost. In this study, supply chain distribution network of two cable manufacturers were analyzed with the help of a linear programming mathematical model. The framework developed can be broadly categorized into three different stages in the life cycle of a product, namely a) Pre-production Phase b) Post-production Phase c) Distribution Phase. Transportation costs were estimated for each of these phases. Additional scenarios like increasing and decreasing the number of distributors were considered and analyzed for any reduction in the overall transportation costs of the supply chains. The findings show that varying the number of distributors may not necessarily result in a reduction in transportation cost. This study conveys that organizations need to strategically position their distributors to optimize the distribution costs. The developed framework is applicable to any supply chain network with multiple suppliers, single manufacturer, multiple distributors and multiple customers. This study may inspire future study on developing and solving models with a diverse range of scenarios.

Keywords
Supply chain distribution system, linear programming mathematical model, transportation network

1. Introduction

Supply chains always delve into strategies to optimize the key metrics that define the success of a supply chain. Transportation cost is one such metric that constantly motivates enhancement and optimization of supply chains in order for it to be profitable (Russell, Coyle, Ruamsook, & Thomchick, 2018). Transportation costs are greatly affected by distribution networks (Li, Lim, Miao, & Rodrigues, 2006). Distribution refers to transfer of goods between any of the two consecutive stages involved in a supply chain. Distribution is one of the prime factors that requires heavy weightage in a supply chain as it not only determines the overall cost of the supply chain, but it also directly affects the consumer experience (Chopra & Meindl, Supply Chain Management - Strategy, Planning and Operation, 2007). Organizations can choose their distribution network designs; but a poor distribution network design can cause supply chains to result in non-profitability and can greatly affect its performance. Distribution networks can directly affect the overall supply chain profitability and responsiveness (Rajgopal, 2016). Chopra, 2003 states that there are two factors that must be considered while assessing the performance of a distribution network: a) Customer requirements met and b) Cost of meeting customer requirements. An organization must understand its requirements and numerically analyze the locations suitable for its distribution centers. Thorough analysis of affecting factors must be done to decide on the locations, capacities, modes of transport and transportation costs involved.

There are many factors that affect the distribution network design of a supply chain. Few of them as stated by Chopra & Meindl, 2007 are a) response time, b) product variety, c) product availability, d) customer experience, e) time to market, f) order visibility and g) returnability. Response time refers to the total time in which an order is received by a consumer. Product variety refers to the diverse collection of products present in the distribution network. Product availability is the availability of a specific product in stock at the time of arrival of the customer. Customer experience

is the convenience the customer experiences while trying to procure the product he ordered. Time to market is the amount of time required to transfer a product to the market. Order visibility refers to the availability of the tracking option for customers to track their order. Returnability refers to the convenience with which a customer can return a product and the skill of the distribution network to handle situations like return, refund, complaints, suggestions and feedback.

Varying a supply chain distribution network may result in any of the following costs: a) Transportation, b) Inventory, c) Information, d) Facilities and handling, e) Sourcing and f) Pricing (Chopra & Meindl, Supply Chain Management - Strategy, Planning and Operation, 2007). With an attempt to reduce any one of the aforementioned costs, organizations tend to alter their supply chain distribution network. Further, some barriers like cultural barriers, language barriers, cost, infrastructure, location factors and political factors also affect the distribution network of a supply chain (Hajoary, 2016).

In this study, the existing design network of two cable manufacturers based in Qatar and USA were considered. The elements involved in the design network are multiple suppliers, one manufacturing unit, multiple distributors and multiple customers for both the organizations. The different stages of the supply chain are broadly categorized into three phases, namely a) Pre-production Phase b) Post-production Phase c) Distribution Phase. Pre-production phase involves transportation of supplies from the supplier to the manufacturing unit. Post-production phase involves transportation of finished products from the manufacturing unit to distributors/retailers. The distribution phase refers to transporting goods from the distribution centers to the customers. Transportation costs were calculated and analyzed for different distribution networks for both organizations.

2. Literature review

In the recent past, several wholesalers and retailers have merged their physical and logistics operations with transportation perception of supply chain management to improve competitive advantage (Tan, 2001). The significance of an effective physical distribution in a supply chain logistics process is critical (Tan, 2001). An effective synchronization of distribution and logistics activities, with the help of a robust information technology system is necessary for the performance of an organization (Lewis & Talalayevsky, 1997).

Distribution center location models have been categorized based on the following: a) capacity of the distribution nodes, b) number of warehouses, c) number of products, d) cost structures for maintaining the network, e) local demand patterns, f) capability to manage other side constraints, etc (Aikens, 1985).

Burns, 1985 had developed and evaluated an analytic approach to minimize the transportation and inventory costs for a supplier distributing goods to multiple customers. He considered vehicle routing and inventory costs related to the size of the shipment. The approach focused on the distribution of customer demand and the density of customers, instead of considering customer demand in a specific location. Key variables in the formulae involved in the approach were customer density, demand, product worth, inventory and per-mile transportation charge.

Jayaraman, 1998 had presented a mixed integer programming model, FLITNET, which he had used to determine the minimum distribution cost linked with locations of facilities, inventory and transportation means. The study focussed on determining the alternatives to transport along with effective and efficient inventory management with the estimated number of plant locations and distribution centers would be essential in order to achieve minimum inventory, location and transportation costs.

Kumar et al., 2017 conducted a detailed analysis of the performance of a supply chain done using different models like mixed integer programming, linear programming, fuzzy model approach, etc, with emphasis on production planning, inventory and transportation in a distribution design network. The LINGO algorithm was used for the analysis of numerical data and balancing distribution centers in a supply chain with multiple objectives. A multi-objective mixed integer non-linear programming was used to determine the supply chain network in the study, considering plant capacities were given and products were supplied by a single supplier.

There are many distribution network choices that can be made in a supply chain from suppliers to the customers. Decisions have to be taken by managements of organizations to arrive at an optimized and a well-analysed distribution

network. Some of the distribution networks are: a) Manufacturer storage with direct shipping, b) Manufacturer Storage with Direct Shipping and In-Transit Merge, c) Distributor Storage with Carrier Delivery, d) Distributor Storage with Last Mile Delivery, e) Manufacturer or Distributor Storage with Consumer Pickup and f) Retail Storage with Consumer Pickup (Chopra & Meindl, Supply Chain Management - Strategy, Planning and Operation, 2007). Each of these distribution networks can be analyzed for the various factors mentioned in the previous section like response time, product variety, availability, inventory, etc.

Every distribution network would have a common goal of determining the minimum cost framework, with providing the best customer satisfaction and delivery while not exceeding the capacity of the distribution centers (Amiri, 2006). Amiri, 2006 had developed a Lagrangean relaxation technique to model the minimum cost required to cater to customer demands from warehouses or distribution centers, transport costs from the manufacturing units to the warehouses, etc.

Rushton et al., 2014 had mentioned about the relation between the stem distance of a distribution network and the number of sites. More the number of sites, less is the stem distance, subsequently leading to lesser transport cost. Factors that would be relevant in studying the feasibility of logistics were stated, such as a) transport mode availability, b) infrastructure changes, c) technology changes, d) information technology, e) environmental impacts, etc (Rushton, Croucher, & Baker, 2014).

A number of distribution network modelling approaches are available. Some of the significant and the most widely used ones are: a) mathematical modelling, b) Heuristic methods, c) simulation, d) Practical approaches (Rushton, Croucher, & Baker, 2014). Each of these approaches has drawbacks, but the most convenient, faily accurate and easily approachable technique is the linear programming mathematical model. However, this model can get complex as we consider multiple components in a supply chain network and the optimized solutions of the model may be applicable only locally.

3. Problem Statement & Objectives

Many manufacturing companies base their suppliers on quality of product, quality of service and distance of supplier. Some companies fail to investigate and optimize all the three above stated factors while establishing their supply chain network. This study aims to investigate the distribution networks of two cable manufacturers, Arabian Cable Company (ACI) and General Cables (GC) based in Qatar and USA respectively. These companies are similar in size, revenue and the supply chain distribution design. The distribution networks of each of the cable manufacturer takes into consideration multiple suppliers, a single manufacturer, multiple distributors and multiple customers. To generalize and simplify the network, a single product, regular 1kV PVC Flexible Cable is considered. The broad classification of raw materials involved in the production of this cable are PVC main material, PVC colour masterbatch and copper rod (General Cable, 2014).

Keeping the number of suppliers, manufacturer and customers constant, the number of distribution centres have been varied and three scenarios were considered for each manufacturer. Each scenario has been modelled using the linear programming mathematical model on Excel solver to yield optimal results taking into consideration the following constraints:

a) Supply of products from the distributors should be equal or lesser than the capacity of the distributors.
b) Demand of goods at the customer levels have to exactly match the requirements of the customers. No excess or deficient number of goods are to be supplied.

The main objectives of this study are:

- Understand the significance of distribution network design in a cable manufacturer supply chain.
- Study and analyze the distribution network performance of existing supply chain network of two cable industries.
- Optimize the aforementioned supply chain networks using Linear programming mathematical model in Excel and suggest a suitable network design with optimized transportation costs.

4. Existing or Initial Supply Chain/Logistics Network, Modeling and Optimization

Two similar cable manufacturing supply chain distribution designs were considered, one in the MiddleEast and another in USA. This section describes the scenarios and the network design in detail.

4.1 Supply Chain Distribution Network Analysis 1: Arabian Cable Industry, Qatar

The supplier locations for Arabian Cable Industry, Qatar are UK – location 1, UK – location 2 and Netherlands. The manufacturing unit is located in Doha, Qatar. Their distribution center is located in India. The customer locations are broadly considered to be South Korea, Australia and United Arab Emirates.

Table 1. Supply chain components - Arabian Cables Industry

Arabian Cable Industry			
Suppliers	**Manufacturer**	**Distributors**	**Customers**
UK-1	**Qatar**	**India**	**S. Korea**
Netherlands	**-**	**-**	**Australia**
UK-2	**-**	**-**	**UAE**

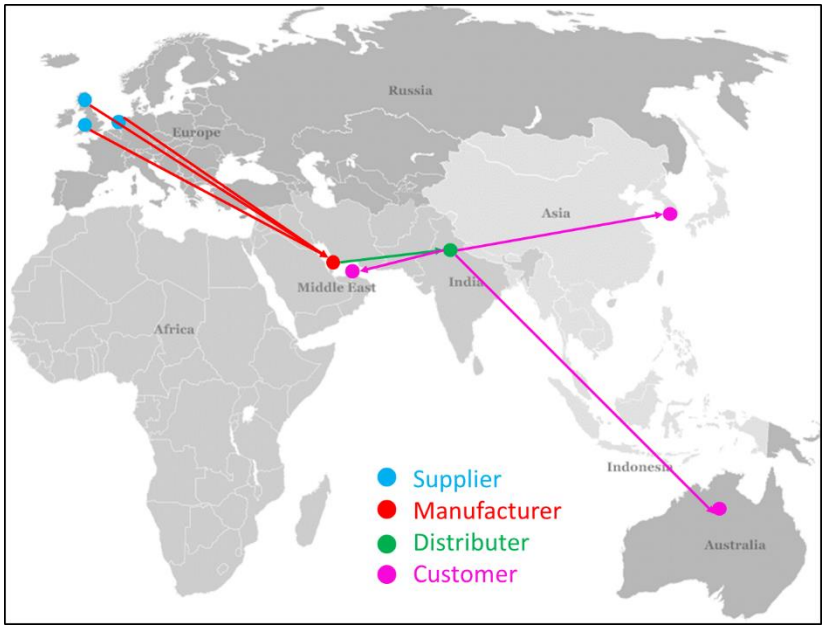

Figure 1. Existing distribution network design of Arabian Cables Industry

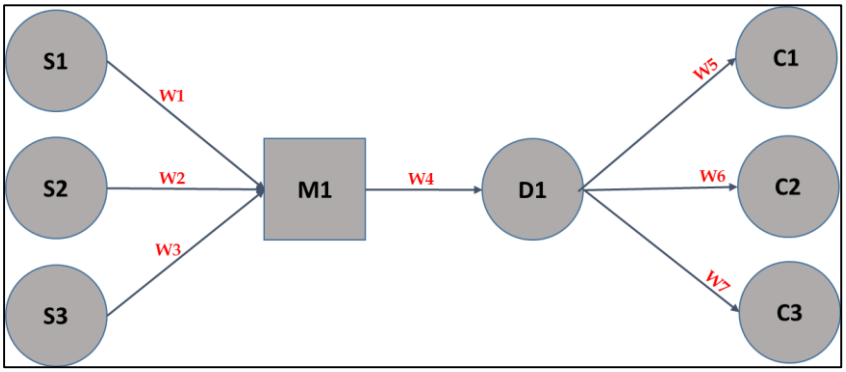

Figure 2. Schematic representation of the distribution network design of Arabian Cables Industry

The total demand of units across all three customer locations is considered to be 600. The total demand of raw material units from all suppliers combined is considered to be 900. Using the Linear programming mathematical model on Excel, the cost of the supply chain distribution network can be broadly broken down as below:

a) Transportation costs from supplier to manufacturer (900 units)

Table 2. Distances from suppliers to manufacturer - ACI

To / From	Qatar (Distance in miles)	Distance Factor	Units
UK-1	4470	1.1	300
Netherlands	3907	1.0	300
UK-2	4470	1.1	300

Cost involved = [(300x1.1) + (300x1.0) + (300x1.1)] = 986.5 price units

b) Transportation costs from manufacturer to distributor (600 units)

Table 3. Distances from manufacturer to distributor - ACI

From / To	Qatar (distance in miles)	Factor	Units
India	1801	1.0	600

Cost involved = [(600x1.0)] = 600 price units

c) Transportation cost from distributor to customers (600 units)

Below is the data fed to the solver:

Table 4. Distance factors from distributor to customers - ACI

	C1 (S.Korea)	C2 (Australia)	C3 (UAE)	Capacity
D1 (India)	31.2	48.4	15.6	600
Requirement	200	150	250	

Subject to the constraints as stated in the following table, below are the results of the optimized solution returned by the solver.

Table 5. Optimized solution returned by solver - ACI

	C1 (S.Korea)	C2 (Australia)	C3 (UAE)	Supply	Capacity
D1 (India)	**200**	**150**	**250**	600	**600**
Demand	200	150	250		
Requirement	**200**	**150**	**250**		

The calculated distribution costs are the sum products of the above two tables which is 17391 price units.

Therefore total overall transportation costs involved in the distribution network is 986.5 + 600 + 17391 = 18977.5 units.

4.2 Supply Chain Distribution Network Analysis 2: General Cables, KY-USA

The supplier locations for General Cables, Kentucky are based in different locations in USA namely, Illinois, Texas, Rhode Island, Indiana and Alabama. The manufacturing unit is located in Kentucky. They have two distribution centers located in Nevada and Kansas. The customer locations are considered to be Wisconsin, Michigan and Florida.

Table 6. Supply chain components – General Cables

General Cables			
Suppliers	**Manufacturer**	**Distributors**	**Customers**
IL	**KY**	**KS**	**WI**
TX	**-**	**NV**	**MI**
RI	**-**	**-**	**FL**
IN	**-**	**-**	**-**
AL	**-**	**-**	**-**

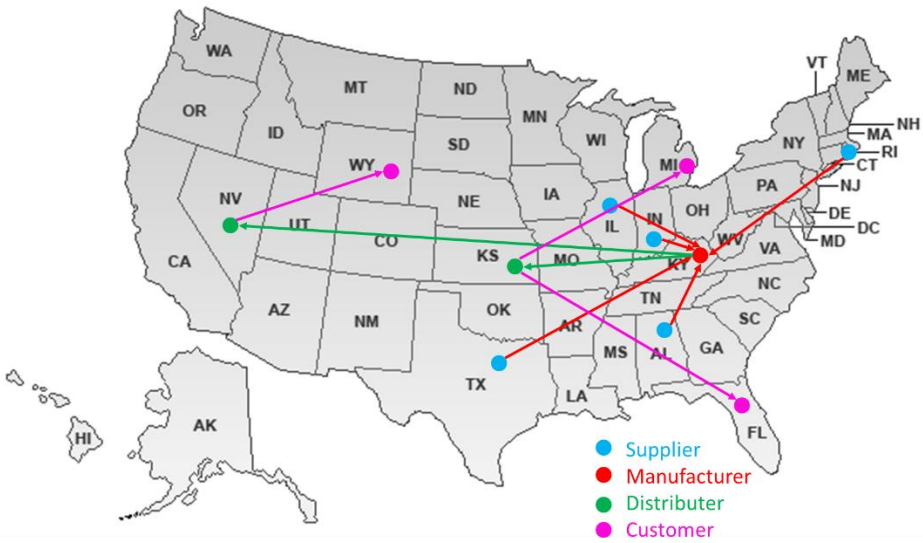

Figure 3. Existing distribution network design of General Cables

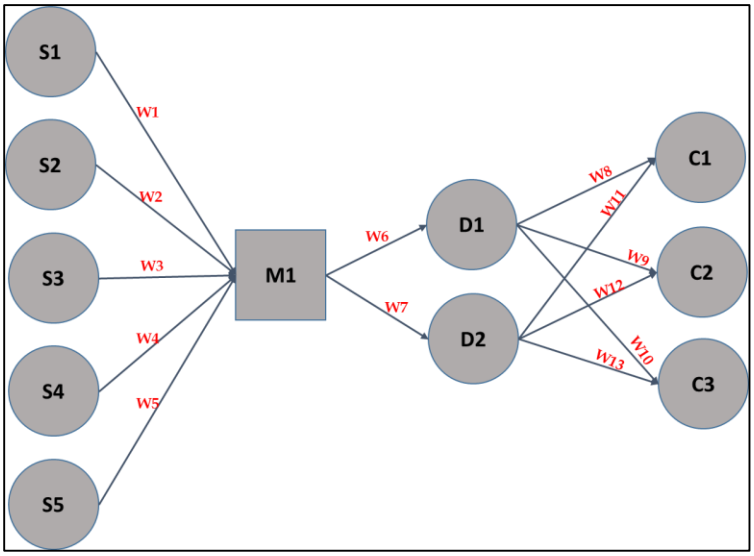

Figure 4. Schematic representation of the distribution network design of General Cables

The total demand of units across all three customer locations is considered to be 700. The total demand of raw material units from all suppliers combined is considered to be 1000. Using the Linear programming mathematical model as done for the previous mentioned supply chain,

a) Transportation costs from supplier to manufacturer (1000 units)

Table 7. Distances from suppliers to manufacturer - GC

To / From	KY (Distance in miles)	Distance Factor	Units
IL	410	1.0	200
TX	1114	2.7	200
RI	865	2.1	200
IN	717	1.7	200
AL	500	1.2	200

Cost involved = 1759.0 price units

b) Transportation costs from manufacturer to distributor (700 units)

Table 8. Distances from manufacturer to distributor - GC

From / To	KY (distance in miles)	Factor	Units
KS	836	1.8	300
NV	2029	4.3	400

Cost involved = 1270.8 price units

c) Transportation cost from distributor to customers (700 units)

Below is the data fed to the solver:

Table 9. Distance factors from distributors to customers - GC

	C1 (WY)	C2 (MI)	C3 (FL)	Capacity
D1 (NV)	1.2	3.1	4.0	400
D2 (KS)	1.1	1.5	2.3	300
Requirement	300	200	200	

Subject to the constraints considered, below are the results of the optimized solution returned by the solver.

Table 10. Optimized solution returned by solver - GC

	C1 (WY)	C2 (MI)	C3 (FL)	Supply	Capacity
D1 (NV)	**300**	**100**	**0**	400	**400**
D2 (KS)	**0**	**100**	**200**	300	**300**
Demand	300	200	200		
Requirement	**300**	**200**	**200**		

The estimated distribution cost is 1278.5 units.

Therefore total overall transportation costs involved in the distribution network is 1759.0 + 1270.8 + 1278.5 = 4308.4 units.

5. Proposed or Improved Supply Chain/Logistics Network, Modeling and Optimization

Two scenarios each were considered for both the supply chain distribution network designs by varying the number of distributors in the design. Hence, the cost involved in transportation from suppliers to manufacturers remain constant. Details of both scenarios for each supply chain network are described in the below sub-sections.

5.1 Supply Chain Distribution Network Scenarios Analyzed for Arabian Cable Industry, Qatar

While keeping the number of other components in the supply chain constant, the number of distributors were increased to three and four respectively in the two scenarios considered. Distributors considered in scenario 1 and scenario 2 are India, Saudi Arabia, Australia and India, Saudi Arabia, Australia and UAE respectively.

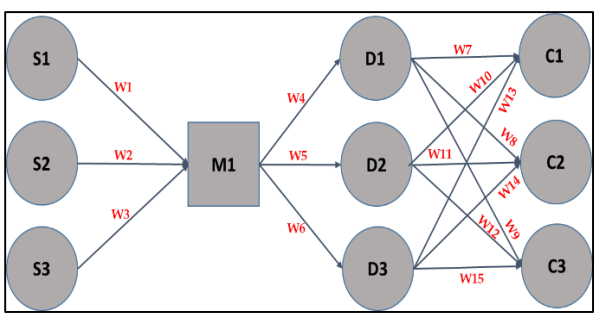

Figure 5: Scenario 1 ACI – Three distributors

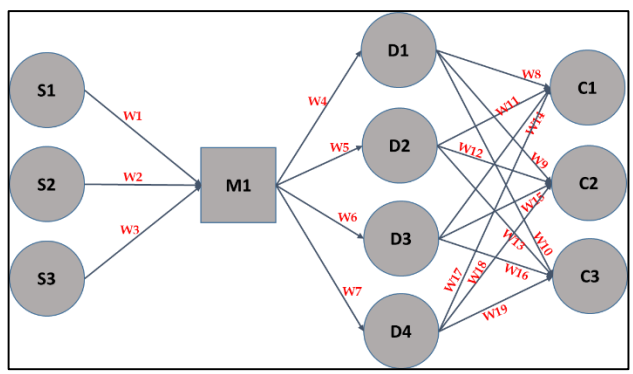

Figure 6: Scenario 2 ACI – Four distributors

In Scenario 1, Transportation cost from manufacturer to distributor were estimated to be 2661.8 units.

Table 11. Distances from manufacturer to distributor - ACI Scenario 1

From	Qatar	Factor	Units

To			
India	1801	3.7	300
Saudi Arabia	484	1.0	200
Australia	6512	13.5	100

Table 12. Distance factors from distributors to customers - ACI Scenario 1

	C1 (S.Korea)	**C2 (Australia)**	**C3 (UAE)**	**Capacity**
D1 (Saudi Arabia)	49.3	68.4	5.7	200
D2 (India)	31.2	48.4	15.6	300
D3 (Australia)	42.6	3.6	63.3	100
Requirement	200	150	250	

Table 13. Optimized solution returned by solver - ACI Scenario 1

	C1 (S.Korea)	**C2 (Australia)**	**C3 (UAE)**	**Supply**	**Capacity**
D1 (Saudi Arabia)	**0**	**0**	**200**	200	**200**
D2 (India)	**200**	**50**	**50**	300	**300**
D3 (Australia)	**0**	**100**	**0**	100	**100**
Demand	200	150	250		
Requirement	**200**	**150**	**250**		

The estimated distribution cost is 10927 units.

Overall transportation costs involved in the distribution network is 986.5 + 2661.8 + 10927 = 14575.3 units.

Similar analysis was performed for scenario 2, considering four distributors located in India, Saudi Arabia, Australia and UAE. But the overall transportation costs summed up to **14713 units**. Hence, the optimum solution among the cases considered so far is scenario 1.

5.2 Supply Chain Distribution Network Scenarios Analyzed for General Cables, KY - USA

Foe General Cables, the number of distributors were increased to three and decreased to one respectively in the two scenarios considered. Distributors considered in scenario 1 and scenario 2 are KS, NV, NC and KS respectively.

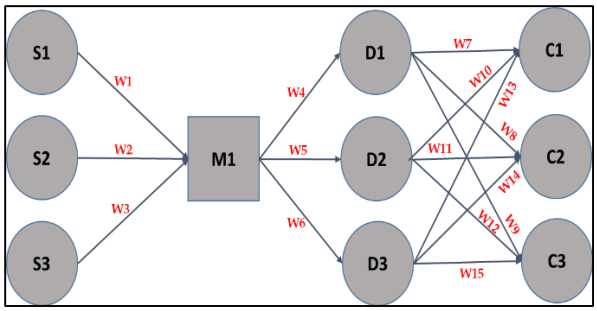

Figure 7: Scenario 1 GC – Three distributors

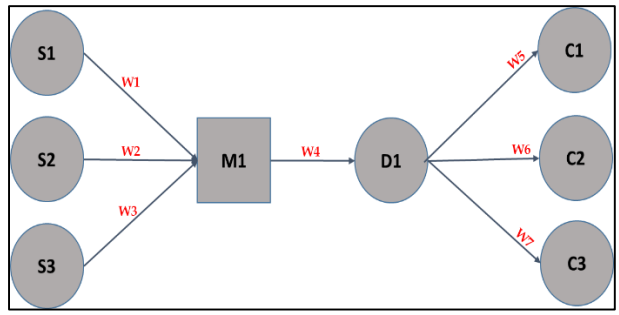

Figure 8: Scenario 2 GC – One distributor

In Scenario 1, Transportation cost from manufacturer to distributor were estimated to be 1265.3 units.

Table 14. Distances from manufacturer to distributor – GC Scenario 1

From / To	KY	Factor	Units
KS	836	1.8	300
NV	2029	4.3	100
NC	470	1.0	300

Table 15. Distance factors from distributors to customers – GC Scenario 1

	C1 (WY)	C2 (MI)	C3 (FL)	Capacity
D1 (NV)	1.2	3.1	4.0	100
D2 (KS)	1.1	1.5	2.3	300
D3 (NC)	2.9	1.3	1.0	300
Requirement	300	200	200	

Table 16. Optimized solution returned by solver - GC Scenario 1

	C1 (WY)	C2 (MI)	C3 (FL)	Supply	Capacity
D1 (NV)	**100**	**0**	**0**	100	**100**
D2 (KS)	**200**	**100**	**0**	300	**300**
D3 (NC)	**0**	**100**	**200**	300	**300**
Demand	300	200	200		
Requirement	**300**	**200**	**200**		

The estimated distribution cost is 816.26 units.

Overall transportation costs involved in the distribution network is 1759 + 1265.3 + 816.26 = 3840.6 units.

Similar analysis was performed for scenario 2, considering only one distributor located in Kansas. But the overall transportation costs summed up to **4099.1 units**. Hence, the optimum solution among the cases considered so far is scenario 1.

6. Results and Discussion

It has been noticed that decreasing or increasing the number of distributors does not necessarily affect the distribution costs in a supply chain network. Below is a summary of all the cases considered for a comparative analysis in the form of a table provided for both manufacturers.

It is seen that increasing the number of distribution centers for the design network of Arabian Cable Industry proved to result in reducing the transportation costs, with three distribution centers resulting in optimum cost among the scenarios.

It is observed that the transportation cost is reduced when General Cables varies its distribution centers to three and one. However, optimum results are obtained in the three-distribution center network.

Table 17. Summary of results of all scenarios for both supply chains

Company	Description	No of Suppliers	No of Distributors	Costs-Supplier to Manufacturer	Costs-Manufacturer to distributor	Distribution Costs	Total Supply Chain Cost
ACI	**Present scenario**	3	1	986.5	600.0	17391.0	18977.5
	Scenario 1	3	3	986.5	2661.8	10927.0	14575.2
	Scenario 2	3	4	986.5	2253.6	11473.0	14713.1
GC	**Present scenario**	5	2	1759.0	1270.8	1278.6	4308.4
	Scenario 1	5	3	1759.0	1265.3	816.3	3840.6
	Scenario 2	5	1	1759.0	1245.1	1095.0	4099.1

Existing cost
Optimized cost

7. Conclusion

Supply chain distribution network designs play a major role in deciding the performance and profitability of an organization. Along with reduction in distribution costs, a good distribution network also results in satisfactory customer service and experience. An effective network topology helps to address all factors that define the success of a supply chain.
As every organization is free to design its own distribution network, a detailed analysis of all network options along with modes of transport and all constraints that may be involved has to be conducted. Organizations have to understand and estimate their requirements, potential customer locations and demand, uncertainty in demand, capacities, etc before setting up a network.
In conclusion, it has been seen that altering the patterns of distributors in a network may not always result in reduced distribution costs. Hence, all the possibilities and combinations have to be analyzed through a reliable and accurate approach before implementing the design. Future study may be conducted on complex detailed supply chain distribution network designs with more accurate models to arrive at optimal solutions.

References

Aikens, C. H. (1985). Facility location models for distribution planning. *European Journal of Operational Research 22*, 263-279.

Amiri, A. (2006). Designing a distribution network in a supply chain system: Formulation and efficient solution procedure. *European Journal of Operational Research 171*, 567–576.

Burns, L. D. (1985). Distribution Strategies that Minimize Transportation and Inventory Costs. *Operations Research, Vol 33*, 469-490.

Chopra, S. (2003). Designing the distribution network in a supply chain. *Transportation Research Part E: Logistics and Transportation Review, Volume 39, Issue 2*, 123-140.

Chopra, S., & Meindl, P. (2007). *Supply Chain Management - Strategy, Planning and Operation*. New Jersey: Pearson Publish Hall.

General Cable. (2014). *THHN/THWN-2 High Speed (HS) Copper Cable.* Retrieved from http://www.generalcable.com: http://mobile.epaperflip.com/?docid=c75a8573-4bd6-4dc1-b210-a3a900dcb979&page=2#page=1

Hajoary, D. (2016). Supply chain Management of Indian Enterprise in International Operations: Type of Modern Literary Critique. *International Journal of Research - Granthaalayah, Vol. 4, No. 3*, 107 - 118.

Jayaraman, V. (1998). Transportation, facility location and inventory issues in distribution network design: An investigation. *International Journal of Operations & Production Management*, 471-494.

Kumar, S., Sardar, I., & Tripathy, S. (2017). Mathematical Model Used to Determine Supply Chain Performance in Manufacturing. *International Journal of Management & Business Studies, Issue 1*, 2231-2463.

Lewis, I., & Talalayevsky, A. (1997). Logistics and information technology: A coordination perspective. *Journal of Business Logistics 18.1*, 141-157.

Li, X., Lim, A., Miao, Z., & Rodrigues, B. (2006). Reducing Transportation Costs in Distribution Networks. *International Conference on Industrial, Engineering and Other Applications of Applied Intelligent Systems* (pp. 1138 - 1148). Annecy, France: Springer.

Rajgopal, J. (2016). *Supply Chains: Distribution, Warehousing, Transportation.* Retrieved from University of Pittsburgh, Department of Industrial Engineering: http://www.pitt.edu/~jrclass/sca/notes/9-Distribution.pdf

Rushton, A., Croucher, P., & Baker, P. (2014). *The Handbook of Logistics and Distribution Management: Understanding the Supply Chain.* London: Kogan Page Publishers.

Russell, D., Coyle, J. J., Ruamsook, K., & Thomchick, E. A. (2018). *The real impact of high transportation costs*. Retrieved from http://www.supplychainquarterly.com: http://www.supplychainquarterly.com/topics/Logistics/20140311-the-real-impact-of-high-transportation-costs/

Tan, K. C. (2001). A framework of supply chain management literature. *European Journal of Purchasing & Supply Management 7*, 39-48.

Biography

Ayyagari Ramani is a research student at New York University, Abu Dhabi. She earned a B.E. (Hons) Chemical Engineering degree from BITS Pilani, Dubai, MSc. Renewable Energy Engineering from Heriot Watt University, Dubai and MSc Engineering Management from Lawrence Technological University, Michigan - USA. One of her significant career ventures is at Dubai Cable Company as a Process Engineer in the manufacturing department where she worked on multiple process improvement projects and waste-reduction projects as part of lean manufacturing. Her interdisciplinary research interests include lean and agile construction, consequences of 3D printing on supply chain, continuous improvement initiatives in production and latest process advancements in manufacturing and construction.