Improved Design of Metered-Dose Inhaler Techniques

Aezeden Mohamed
aezeden.mohamed@pnguot.ac.pg

Peter Oyekola
19800534peoy@pgs.pnguot.ac.pg

John Pumwa
john.pumwa@pnguot.ac.pg
Department of Mechanical Engineering
Papua New Guinea University of Technology
Lae, Papua New Guinea

Abstract

A metered dose inhaler (MDI) was modified to facilitate the discharge of vaporized medication. Several designs were considered using simple machines and associated parts like levers, gears, handles, etc. The final design includes a modified actuator and incorporates several of the ideas developed in alternative designs. A handle (like a bicycle brake handle) attached to the actuator body is squeezed and compresses the canister containing medication. By utilizing leverage, the force necessary to discharge the vaporized medication from the nozzle of the canister decreases. The handle design reduces pressure on the hands and the inhaler design includes a small spacer directly underneath the gas canister which improves the efficiency of use. The final design is functional and solves the problem posed by standard MDI's. It is relatively inexpensive and aesthetically appealing which makes it a competitive product on the market.

Keywords

Asthma, Asthma control, Inhaler design, Inhalation technique, Metering valve.

1. Introduction

An inhaler is a relatively common medical device that is mainly used to treat respiratory diseases. Inhalers are designed to release medications directly to the lungs (Department of Health Australia). Typically, an inhaler releases the medication is in the form of vapor which is sucked in through the mouth and hence straight to the airway (Presspart Manufacturing Ltd). The most common type of inhaler (MDI) consists of a canister that contains the medication dissolved in a solution that is pressurized (3M) (Stein, Sheth, Hodson, & Myrdal, 2014). The canister has a valve that releases the medication in a vaporized form when the nozzle is pressed (Bespak). The canister is inserted into a (typically) plastic actuator with the nozzle facing downwards. Once the bottom of the canister is pressed and the nozzle is pressed inwards the canister releases the vapor and the actuator directs it into the mouth.

The other type of inhaler is the dry powder inhaler (DPI), this releases medication in the form of dry powder (Presspart Manufacturing Ltd). A problem with the standard MDI is that it requires quite a bit of pressure to press the gas canister with a finger or thumb. Users that have frail joints, weak hand or finger muscles may find it difficult to use. Since asthmatic attacks occur suddenly and can be lethal, hence it is important that users are able to effectively dispense their medication.

The goal of the project is to design a viable inhaler that would facilitate the release of the medication and thereby offering a solution to the potentially deadly health issue.
Several alternative designs were conceived primarily based on modifications of the actuator of the MDI. Common concepts and parts that were used in these designs include gears, leverage, and better grip. One design had an electric motor that assisted in pressing down on the bottom of the canister. Our final design incorporated some of these ideas, i.e. leverage, handle, etc. It was also unique as it included an inbuilt spacer, a device used to increase the effectiveness of an inhaler by slowing down the vaporized medication and allowing it to properly reach a user's throat (Asthma Society of Canada), to increase the effectiveness and efficiency of the inhaler. The final design has a handle, akin to a bicycle handle, that uses a lever system to reduce the force necessary to depress the gas canister, and the pressure needed by increasing the area of applied force.

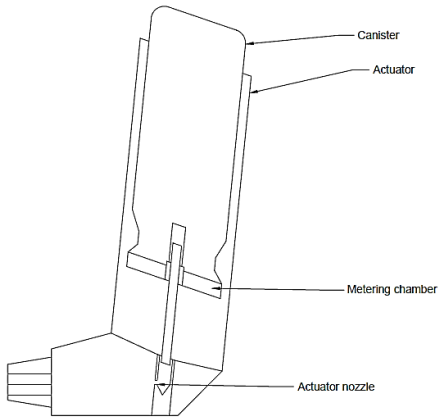

Figure 1. The working mechanism of the regular MDI

2. Materials and Methods

The inhaler design considerations include portability and ease of use with less pressure required to be applied on the canister when administering drugs to the patient in addition, the major consideration was a profitable yet competitively priced design. The inhaler actuator is made of polypropylene, a common plastic used to make packaging bags and containers. It includes a dust cap that prevents dust from getting to the mouthpiece. The actuator is also available in a standard range of colors which are also customizable according to preference. The canister was made using steel (aluminum experimented as well) because of their corrosion resistance property as they are less reactive. The choice of using a non-reactive material is to prevent the chemicals in the drugs from reacting with the container. The inhaler container should in no way deter the administration of the drug and was designed to accommodate a volume range of 14 ml to 19 ml canisters. The inhaler also complies with the standard requirements of the Canadian Standards Association. The inhaler should be produced in an environmentally safe factory, and it should be safely disposable (mtiinstruments).

2.1. Experimental Designs

Lever Assisted Inhaler Design

This design features a lever system top of the inhaler with the long arm of the lever in the direction opposite the mouthpiece, the shorter arm facing towards it. The longer side of the lever bends inwards the actuator at a slight angle. The underside of the short arm of the lever contains a triangular wedge shape that presses the canister when the arm of the lever is compressed towards the actuator. The leverage created by the lever arm sufficiently reduces the force necessary to depress the canister and release the medicine, also since the lever arm has a larger area than the bottom of the canister it would be easier to press since it would create less pressure on the hand.

Table 1. Advantages and disadvantages of the lever system

Pros	Cons
Simple Design	Less structural integrity
Cheap additions to existing design keeps cost down.	Expensive
Reduced force necessary in releasing medicine.	More force required

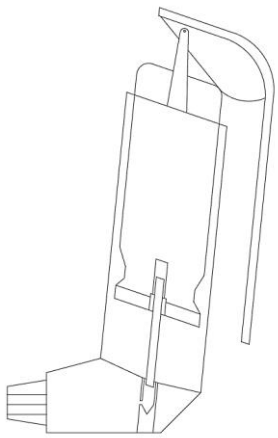

Figure 2. Mechanism of the lever assisted MDI

2.2. Electric Motor Assisted Design

This design featured a small electric motor powered by either 2 AA or 2 AAA batteries which could be replaced with rechargeable Li-Ion battery pack built-in, at a higher cost. The medicine is dispensed by slightly pressing a button that closes the circuit to turn on the electric motor. The motor is connected to a gear system which presses the canister to release the medicine. When the button is released the circuit is open, the motor stops and the spring in the canister restore the canister and lid to their original position (Aliexpress).

Table 2. Advantages and disadvantages of the electric system

Pros	Cons
Requires almost no physical effort to use, pressing the button is very easy.	More complex and expensive than the simpler designs, although it is relatively simple to design, the exact placement of the gears, motor, switch, batteries, and lid is more complex
More efficient	Housing must be designed to contain the machinery.
Less pressing pressure is required	Requires batteries.
Relatively simple design, electric motors, batteries, gear systems, and switches are relatively simple and easy systems to design.	It will be heavier than the other two designs, and thus more difficult to carry.

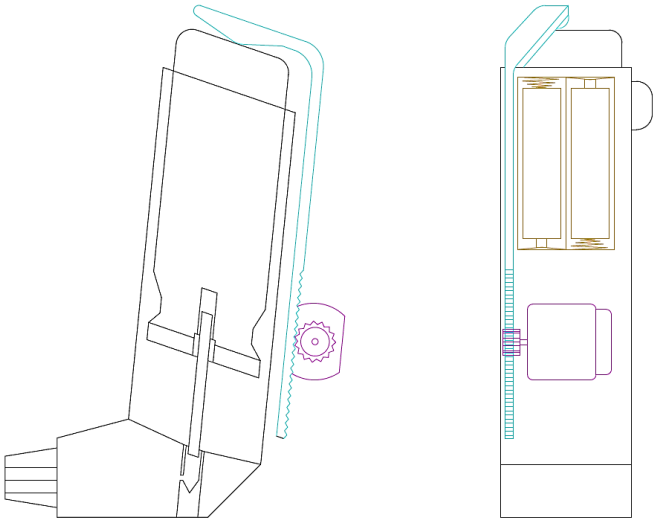

Figure 3. Mechanism of the electric motor-assisted MDI

2.3. Spray-Lever Mechanism

This design focuses on the spraying mechanism (explain that stuff). The container has a stopper that prevents the release of the medication. The spray handle is easy to grip and does not need as much pressure as a standard MDI to release the medication, which is its main advantage. When the spray handle pressed it pushes the spring opening valve and discharges the medication. The length of the delivery tube is long enough to release just one shot of medicine.

Disadvantages

- The medicine comes out as small liquid droplets, instead of a finer vaporized form, this greatly reduces its effectiveness.
- The pressure in the container is less than the pressure in the canister

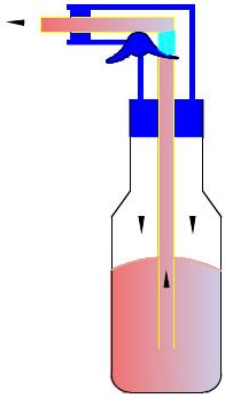

Figure 4. Spray lever mechanism

2.4. Medicine Vaporizer

This design only requires sucking the medicine out of the inhaler. The inhaler ought to beep when one shot is sucked to notify the user to prevent overdosing. The inhaler is designed with approximate dimensions of 7.3×1.1×0.78 cm similar to regular vaporizers. The outer shell is made of silicone or steel to protect the medicine and is covered with rubber on the outside for a better grip. The functionality of this design depends on the vaporization of a liquid usually done by heating.

Table 3. Advantages and disadvantages of the vaporizer system

Pros	Cons
Portable	It is small meaning it will hold less doses than the normal inhaler.
Easy to use	Heating the drug could change its chemical composition.
No need to press anything	The use of batteries means they need to be recharged or changed.

2.5. Lever Mechanism and Incorporated Spacer Inhaler

Typical asthma MDI's are operated with an uncomfortable two-finger grip that makes the canister hard to press and easy for the occurrence of slip. This proposed design allows for force distribution on the hand, the use of a lever mechanism will further reduce the compressive force and an increased grip, therefore, preventing slip. The bent lever mechanism was inspired by the lever mechanism of a bicycle brake (figure 5) (OldGloryMTB, 2015). an additional feature of this design allows the inhaler to be attached to a lanyard for easy access and carriage. An effort in alleviating the problem of carrying a voluminous and inconvenient spacer, a small incorporated spacer was included in the design. Though the incorporated spacer might not be as large and effective as a regular one since it won't allow the vapour to slow down over long distance but otherwise, it will be conveniently portable.

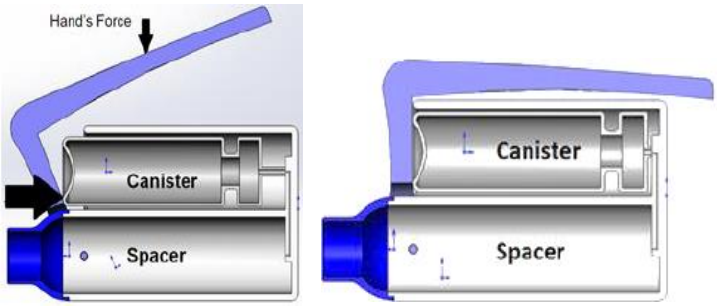

(a)

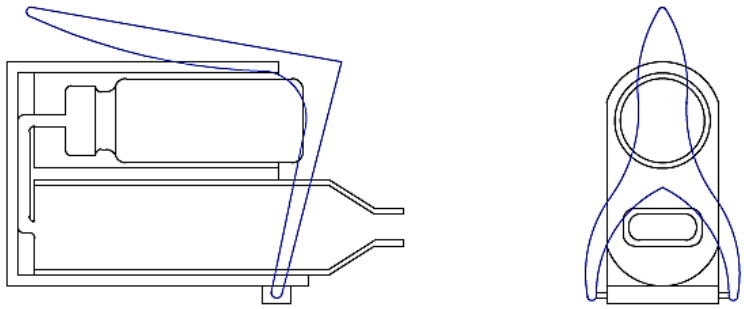

(b)

Figure 5. Design arrangement of the (a) handle (b) Lever Mechanism and Incorporated Spacer MDI

2.6. Gear Mechanical Advantage

Figure 6 shows two linear gears interlocked with a compound gear ($Gear_1$) of radius 'r' and $Gear_2$ of radius 'R'. $Gear_1$ has a 1:3 ratio with $Gear_2$ as well as Linear $Gear_1$ and Linear $Gear_2$. Δ X is the distance the spring in the canister needs to be compressed so a dose can be released. Δ X has the same length as Linear $Gear_1$ which has the same length as $Gear_1$'s circumference and gear ratio. The gear setup and mechanical advantage allow the user to apply a downward force on Linear $Gear_2$ of just a third of the magnitude of the opposing force being applied by the spring. Despite the user having to apply only a third of the force, he must apply it through three times the distance Δ X. The amount of work done by the system remains the same,

$$W = 3\,\Delta X \times Ff = \Delta X \times Fs \tag{1}$$

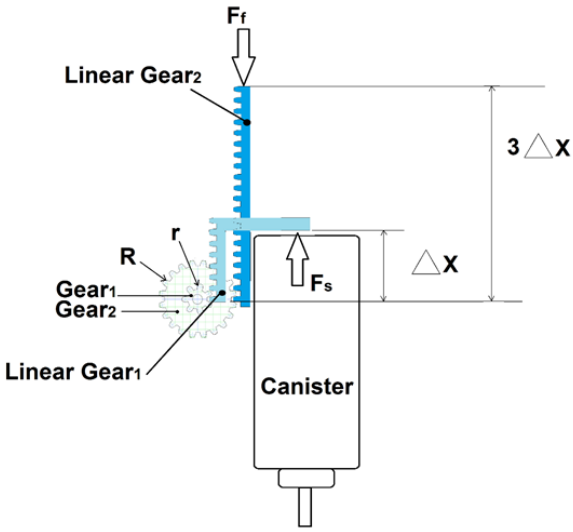

Figure 6. Mechanism of the mechanical gear system

3. Results and Discussion

From all the designs, The Lever Mechanism, and Incorporated Spacer Inhaler design was more favored and proved to be the best solution to the problem. It presented a simple yet elegant mechanical solution that did not require the modification of the gas canister.

One considerable requirement was that the final design would not require modification to the gas canister, as that would require a shift in or addition to the design methods already adopted as the industry standard. The design also incorporates a spacer that allows the gas to slow down, expand (Vitality Medical, 2015), and reach the user's lungs easily this is because common spacers loosen easily and are inconvenient to carry. Though the incorporated spacer will not be as large as the regular ones sold separately as an attachment, it will still assist in the delivery of the medication to the user's lungs.

The lever system that compresses the canister has two main functions:

- Provide mechanical advantage so that the force required to press the canister is reduced.
- Aids the use of the whole hand to press the lever, thereby increasing the surface area, and decreasing the pressure needed to be exerted.

For the standard MDI, the user could only use his index and thumb to exert a force on the canister. This provides an uncomfortable grip and accounts for easy slip and drop. The lever system provides the user with a

firm grip, and the force required to press on the inhaler can be distributed among the whole hand, and not just two fingers. In addition to this, the force that needs to be exerted by the user would only be a fraction of the original amount thanks to the mechanical advantage provided by the lever. This is a two-in-one solution to the problem.

Despite the added volume and material, the size of the proposed inhaler design is kept small enough to fit into the pocket. The front section of the spacer is threaded so that the user can unscrew and clean. This was included in the final design so that all parts of the inhaler are accessible for cleaning. In addition, the inhaler could be attached to a lanyard and hung from the neck.

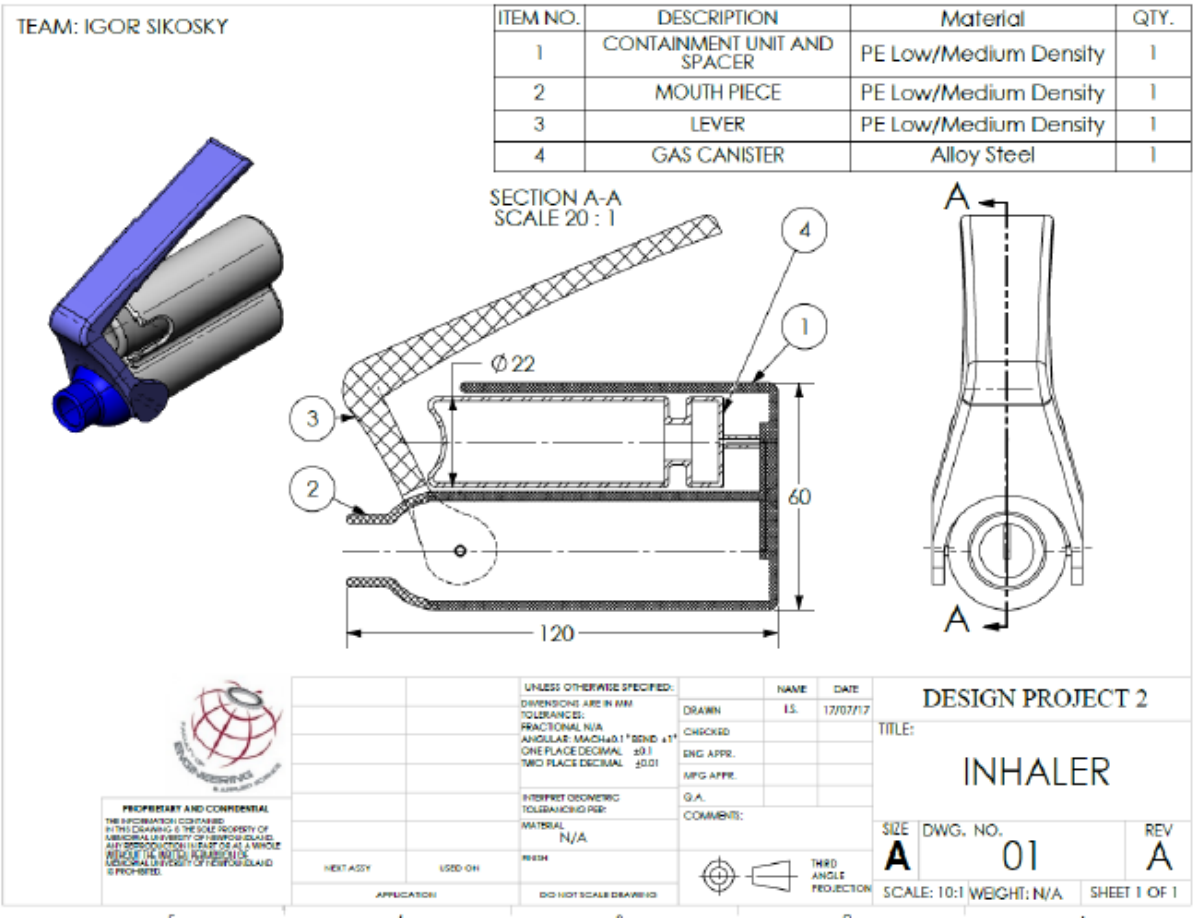

Figure 7. General arrangement drawing

The issue of stability during handling which affects standard inhalers that require too much force to release the medication was considered. Since most current MDI's in the market have the same plastic actuator may be difficult to grip for someone who has limited strength in their hands and fingers. This could cause the inhaler to slip from their hands and break. This situation would be potentially fatal given that the user needs the inhaler to treat an attack. To create more grip, the actuator body is covered in a patterned rubber, like that of a bicycle handle. Having a better material to hold would give the design more stability, as well as making it more comfortable for the user.

4. Conclusions

The final design satisfies all the requirements previously specified. Its materials are kept light and inexpensive, the design is aesthetically appealing without compromising the structural integrity of the inhaler as a whole or affecting the drug. The actuator is designed for easy gripping and insertion of the inhaler canister also, the joints between the spacer and the actuator have fillets to increase the structural strength of the inhaler and reduce the risk of them breaking apart. The handle is pivoted at an optimal location to create the best leverage and the colors of the actuator are chosen based on the drug that is being administered. The handle and actuator are made of polypropylene for lightweight and All the sharp edges are filleted out into rounded edges.

Acknowledgement

The authors gratefully acknowledge the participation of the Igor Sikorsky student design project group of the class of 2015, Mechanical Engineering Graphics and Designs (NGI1030) Memorial University Canada.

References

3M. (n.d.). *Drug Delivery Systems.* Retrieved July 2017, from http://www.3m.com/3M/en_US /drug-delivery-systems-us/technologies/inhalation/intelligentcontrol/

Aliexpress . (n.d.). *Aliexpress* . Retrieved July 2017, from https://www.aliexpress.com/item/ ID31-Mini-Ultrasonic-Nebuliser-Nebulizer-Machine-Battery-Operated-For-Aerosol Asthma/32541280861.html?spm=2114.search0305.4.2.MfRJ7i.

Asthma Society of Canada. (n.d.). *Treatment.* Retrieved 2017 July , from http://www.asthma.ca/adults/treatment/spacers.php.

Bespak. (n.d.). *MDI valves and actuators.* Retrieved July 2017, from http://www.bespak.com/wp-content/uploads/2015/10/U969_DATA-SHEET_Bespak_AW_MDI-Valves-and-Actuators-artwork1.pdf

Department of health Australia. (n.d.). *Asthma medications and inhaler devices.* Retrieved from https://healthywa.wa.gov.au/Articles/A_E/Asthma-medications-and-inhaler-devices

explainthatstuff . (n.d.). *how aerosol misterworks.* Retrieved 2017, from http://cdn4.explainthatstuff.com/how-aerosol-misterworks.png

mtiinstruments. (n.d.). *http://content.stockpr.com/mtiinstruments/files/pages/product.* Retrieved July 2017, from http://content.stockpr.com/mtiinstruments/files/pages/product.

OldGloryMTB. (2015). *American mountain bike parts.* Retrieved July 2017, from http://oldglorymtb.com/top-10-best-mountain-bike-grips/

Presspart Manufacturing Ltd. (n.d.). *Two Piece Metered Dose Inhalers.* Retrieved July 2017, from http://www.presspart.com/one-piece-actuators/

Stein, S. W., Sheth, P., Hodson, P. D., & Myrdal, P. B. (2014). Advances in Metered Dose Inhaler Technology: Hardware Development. *Aaps Pharmscitech, 15*(2), 326-338. Retrieved 5 14, 2019, from https://ncbi.nlm.nih.gov/pmc/articles/pmc3969498

Vitality Medical . (2015). *Asthma Spacer.* Retrieved July 2017, from http://www.vitalitymedical.com

Biographies

Aezeden Mohamed has a B.Sc., M.Sc., and Ph.D. degrees in Mechanical and Manufacturing at the University of Manitoba, Canada. His areas of research are experimental in nature includes but not limited; mechanical properties, materials characterizations, corrosion and corrosion control, and biomedical engineering. He has carried out research and taught at the University of Manitoba and Memorial University in Canada. In addition to his technical research interests, he earned a diploma in Higher Education Teaching from the University of Manitoba, Canada. He has published over 10 papers in Canadian Engineering Education Association. Currently, he is a Senior Lecturer at the University of Technology, Papua New Guinea.

Peter Oluwatosin Oyekola is currently running his master's degree program in Mechanical Engineering at Papua New Guinea University of Technology with a focus on design and robotics. He completed his undergraduate study in 2017 from Bells University of Technology, Nigeria. His research interests are design and manufacturing, robotics, dynamics and control, and Transport systems.

John Pumwa is a Professor and current Head of the Department for Mechanical Engineering in the Papua New Guinea University of Technology. He has more than 40 years of teaching and research experience and has published several papers in reputed international journals and conferences. He has also received many awards in a national and international forum.