A Passivity-based Control and Simulation for double cascade DC/DC Converter with a fuel cell

Fadwa El Otmani, **Abdelmajid Abouloifa, Meriem Aourir and Abdellatif Hamdoun**
LTI Lab. Faculty of Science Ben M'sik, university HASSAN II of Casablanca, Casablanca, Morocco
fadwa.elotmani@gmail.com, abouloifa@yahoo.fr, meriem.aourir@gmail.com, alhamdoun@yahoo.fr

Ibtissam Lachkar
LISER Lab, ENSEM Casablanca, university HASSAN II of Casablanca, Casablanca, Morocco
lachkaribtissam@gmail.com

Abstract

the energy is the biggest world's interest in our days for many raisons as the excessive consummation and the pollution due to this abuse of energy. Then many researches are done to overcome those problems, and several solutions are proposed which has led to a serious shift towards developing renewable sources as PEM Fuel cells to meet the need of the hour.

This paper treat a synthesis of a cascade of two BOOST converters used with a fuel cell, where we have begun by presenting a static model of a fuel cell, then we elaborate a nonlinear model of the whole system, the model can be derived using Euler-LaGrange (EL) system equations.

The second part of this work it's about the controlling of the system, as there are many nonlinear methods developed to control the DC-DC converters we decided to use a passivity based control because it is a global defining and global stabilization control method, which is based on the viewpoint of the system energy, The controlling method is to modify the potential energy function and the required loss dissipation function of the close loop system by introducing a suitable stabilizing damping injection scheme. The simulation results have been performed through Matlab/SimPowerSystems environment and show that the designed controllers meet their objectives.

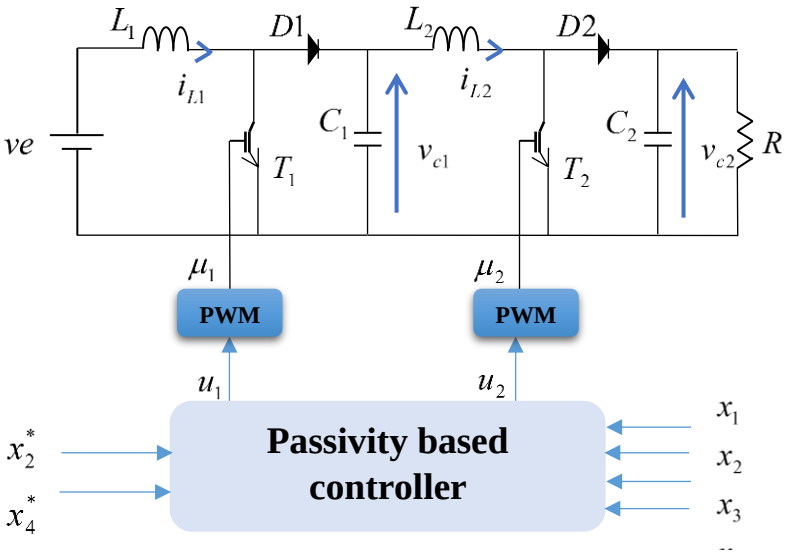

Figure 1 : double boost converter with the passivity based controller

Where i_{L1} and i_{L2} are respectively the currents in inductors L_1 and L_2. v_{c1} denotes the voltage in capacitor C_1 and v_{c2} is the output voltage. μ_1 and μ_2 are denoted the duties ratio functions:

$$\mu_j(j=1,2)=\begin{cases}1 & if \quad T_j \quad is \quad ON \quad and \quad D_j \quad is \quad OFF \\ 0 & if \quad T_j \quad is \quad OFF \quad and \quad D_j \quad is \quad ON\end{cases}$$

And x_1, x_2, x_3 and x_4 denote the average values over cutting periods, of the signals i_{l1}, v_{c1}, i_{l2} and v_{c2} . The controls inputs for the above model is the functions u_1, u_2 called duty ratio function, which is the average values over cutting periods of signals μ_1, μ_2.

x_2^* and x_4^* denote the corresponding voltage's references signals.

Keywords

Passivity based control, fuel cells, DC-DC converter, double cascade boost, non-minimum phase.