Proceedings of the 2016 International Conference on Industrial Engineering and Operations Management
Kuala Lumpur, Malaysia, March 8-10, 2016

Using several intelligences for complex industrial process monitoring :detection and diagnosis

Nafissa Rezki, Leila Hayet Mouss, Djamil Rezki
LAP Laboratory Industrial Engineering Department
Batna University
Batna, Algeria
Nafissa_rezki@yahoo.fr, hayet_mouss@yahoo.fr , drezki@yahoo.fr

Okba Kazar , Laid Kahloul
LINFI Laboratory
Biskra University
Biskra, Algeria
kazarokba@yahoo.fr , kahloul2006@yahoo.fr

***Abstract*—The objective of the current paper is to present an intelligent system for complex process monitoring, based on artificial intelligence technologies. This system aims to realise with success some complex process monitoring tasks that are: detection, diagnosis. For this purpose, the development of a multi-agent system that combines multiple intelligences such as: multivariate control charts, neural networks, has became a necessary. The proposed system is evaluated in the monitoring of the complex process Tennessee Eastman Process.**

***Keywords*—multivariate process; Hotelling T^2 control chart; multi-agent system; neural network**

I. Introduction

Currently, the manufacturing processes become more and more complex and multivariate. In these systems, the operator recuperates a vast data amount to be analysed. The high volume of data and the big number of process variables make the operator task fastidious. To avoid such problems, the data based methods are more suitable for the process monitoring. The multivariate control charts (Hotelling T^2 control chart, Multivariate CUSUM (MCUSUM), Multivariate EWMA (MEWMA)) have been used for the control of multivariate process and have proved their adequacy to reduce the complexity of such process monitoring. Moreover, the monitoring of a multivariate process is a complex task, it can be devised into four subtasks which are: the detection of abnormal situation, the diagnosis of the faults, the identification of variables that involved in the faults, and finally the reconfiguration of the process [1].

Many researchers have used the control charts for process monitoring ([2],[3]). In this paper, we regroup the tasks of the multivariate process monitoring in one approach. Our contribution is to determine the best combination of multivariate control charts and neural networks. The result of this research is a multi agent system that applied to a multivariate process monitoring. This multi-agent system use: multivariate control chart for abnormal detection, neural network for faults diagnosis.

The rest of this paper is organized as follows: section 2 explains the necessary backgrounds. The process-monitoring approach is presented in Section 3 with the monitoring algorithm. In section 4, a case study of simulated Tennessee Eastman Process is employed to illustrate the validity of the proposed approach, including the detection by MCCEA (Multivariate Control Charts Executor Agent), diagnosis by DANNA (Diagnosis Artificial Neural Network Agent). Finally, conclusions and future works are suggested.

II. Basic Concepts

A. *Hotelling T^2 control chart*

The Hotelling T^2 control chart is one of the most used charts for multivariate process monitoring. This chart gives good results in the detection of deviation in the mean vector values of a studied process. In general, for a process with *p* variables, the T^2 is given by "(1)":

$$T^2=n(x-\mu)^T \Sigma^{-1} (x-\mu) \qquad (1)$$

Where:

n: is the sample size.

x: is the observation vector at given time.

μ: is the mean vector of the process.

∑: is the variance-covariance matrix of the process.

This value (T^2) can be represented in the time such as a control chart. In each instance, it is compared with a superior Control Limit (CL). The LCL (Lower Control Limit) is fixed at the value 0. It is necessarily to respect false alarms rate α, by this control limit (CL). This limit is calculated by "(2)":

$$CL=(((p(m+1)(m-1))/(m^2-mp)))F_{\alpha,p,m-p} \qquad (2)$$

Where:

p: is the number of process variables.

m: is the sample size, when the process is in control.

F: represent the Fisher distribution Quantiles.

III. Proposed Model

In this section, we concentrate mainly on the development of a multi-agent system using a set of artificial intelligence techniques that are: NNs, and multivariate control charts. These different intelligences are justified by a set of arguments. First, the multivariate control charts (the Hotelling T^2 control chart, MEWMA, MCUSUM) can detect successfully the instability of the process but it cannot find the type of the fault that appeared in the process and cannot identify the causes of the instability. Thus, we proposed a software agent which can execute and analyse simultaneously a set of multivariate control charts. Also, we use an artificial neural network (ANN) in the faults classification because the NNs have demonstrated their ability in the classification of similar faults. We use the multi-agent systems because it:

- simplifies the communication between the different intelligences (control chart, ANN)
- manages the intelligence diversity
- optimises the time of the monitoring process tasks
- offers a cooperative supervised approach for complex industrial process.

The proposed multi-agent system is composed by two principal agents: the multivariate control chart executor agent (MCCEA), and the DANNA. The following paragraphs describe each of these used agents.

A. The Interface Agent

The IA is a reactive agent which is the bridge between the multi-agent system and the operator. It is an interface for the human operator; hence it receives the request from the users (monitoring the process state). Besides this, the IA transforms the agent's responses to the users. If the IA receives a request from the user, to control the process state, it sends a message to the MCCEA. If the process is stable, the IA informs the operator that the process is under control. Otherwise, the process is unstable; the IA waits the response of the DANNA and displays the list of the correction actions for the operator.

B. The MCCEA

This agent is responsible on the execution of the multivariate control charts (Hotelling T^2 control chart, MCUSUM, MEWMA). The control charts detect successfully the process instability but it cannot give any information about the fault that appears in the process and the variables that are involved in the faults. To monitor successively the process, we suggest using a software agent that executes simultaneously a set of multivariate charts and detect easily the process instability. The different control charts are used in the design of the MCCEA. This agent receives request from the IA about the process state, it executes the control charts. After that, if the process is under control, it sends report to the IA. Otherwise, it informs the DANNA that the process is not stable. The internal behaviour of this agent is shown in Fig.1.

C. Diagnosis artificial neural network agent (DANNA)

We used the NN in the diagnosis task. The NN has been implemented and integrated into the DANNA development in order to obtain a good diagnosis of the process faults. The objective of this NN is to provide classification of the faults that appeared in the process. We create a classical multi-layer perceptron (MLP), with three layers:

- the input layer: the number of neurons in this layer is the number of the process parameters
- the output layer: in this layer, the number of the neurons represents the number of classes (faults of the process)
- the hidden layer: it is generally known that the number of neurons in this layer is problematic research. After a set of tests, we find that the optimal number is equal to: (*number of neurons in the input layer + the number of neurons in the output layer*)/2.
- When the process is unstable, the DANNA receives report from the MCCEA. Its principle objective is to find the fault that appeared in the process. After, it sends a report to the IA.

IV. APPLICATION OF THE PROPOSED MODEL ON THE TEP

A. Introduction to the TEP

The TEP is proposed by Downs and Vogel (1993), to provide a simulated model and to evaluate the monitoring methods of industrial complex process. The process consists of five principal units: a condenser, a separator, a reactor, a compressor, and a stripper (as it is shown in Fig.2.). Four gaseous reactants (A, C, D, and E) and inert B are fed to the reactor. It produces two components (G and H), and the undesired by product F. The reaction equations are listed from (3 to 6). All the reactions are irreversible, exothermic, and approximately first-order with respect to the reactant concentrations. The reaction rates are expressed as Arrhenius function of temperature. The reaction producing G has higher activation energy than that producing H, thus resulting in more sensitivity to temperature.

$$A(g)+C(g)+D(g)\rightarrow G(l) \quad \rightarrow(3)$$

$$A(g)+C(g)+E(g)\rightarrow H(l) \rightarrow(4)$$

$$A(g)+ E(g)\rightarrow F(l) \quad \rightarrow(5)$$

$$3D(g)\rightarrow 2F(l) \quad \rightarrow(6)$$

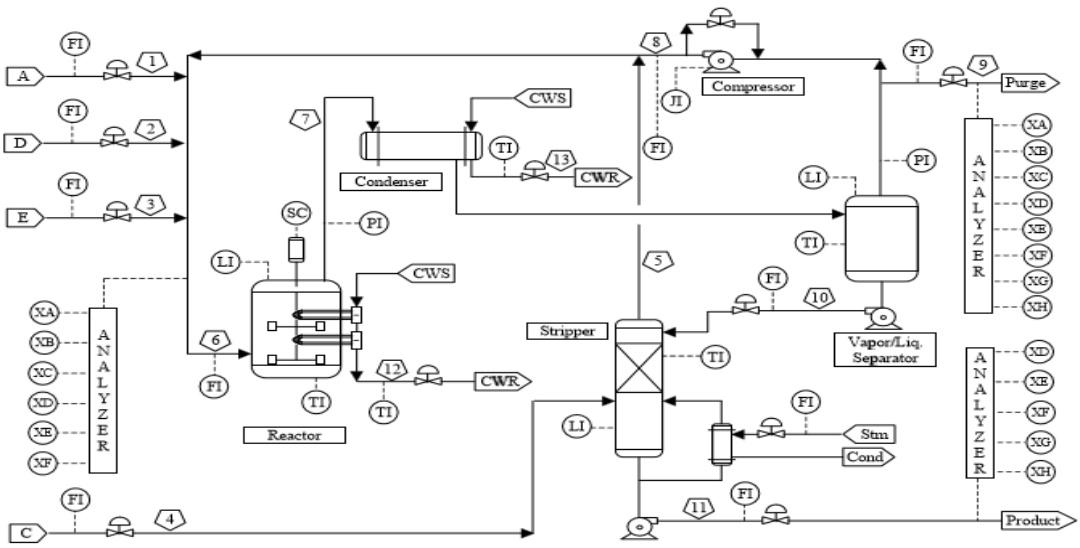

Fig. 1. Tennessee Eastman control problem

The TEP process is proposed in [4] is open loop unstable and it should be operated under closed loop. In this article, we use this control structure to evaluate the performance of our approach on fault diagnosis. The reactor product stream is cooled through a condenser and fed to a vapour-liquid separator. The vapour exits the separator and recycles to the reactor feed through a compressor. A portion of the recycle stream is purged to prevent the inert and by-product from accumulating. The

condensed component from the separator is sent to a stripper, which is used to strip the remaining reactants. Once *G* and *H* exit the base of the stripper, they are sent to a downstream process which is not included in the diagram. The inert and by-products are finally purged as vapour from vapour-liquid separator. The process provides 41 measured and 12 manipulated variables, denoted as XMEAS(1) to XMEAS(41) and XMV(1) to XMV(12), respectively. Fifteen pre-programmed faults IDV(1) to IDV(15) of TEP are given to represent different conditions of the process operation.

B. Application of the proposed model on the TEP

- Detection: the MCCEA runs the Hotelling *T*2 control chart and sends message to the DANNA when it detects the instability of process. For instance Table 1 shows some detection rules. The false alarm rate is 0:01%. The performance of detection system is evaluated by calculating its reliability [5]. The last is defined as: (the number of obtained alerts in the test period/the total number of sample in the period test). Generally, the reliability detection is the same that been obtained in [6].

  Results analyses
  As we see in the Figure 2:
  some faults are easily detectable which are: IDV(4), IDV(5), IDV(6), IDV(7), IDV(14))IDV(1), IDV(2), IDV(8), IDV(10), IDV(12) (reliability of detection = 100%)
  Other faults are difficult to detect which are: IDV(3), IDV(9), and IDV(15) (reliability of detection < 40%)
  For example, the fault IDV(8) is generally detectable (reliability of detection = 97, 95), because the first samples (33 first samples) of this faults are not detectable.
- *Diagnosis:* this task is realised by the DANNA. It receives massage from the MCCEA that the process is unstable. It was decided to use the MLP NN with the training algorithm 'backpropagation'. The inputs data represent the process parameters (51 variables), and the outputs parameters correspond to the process faults. The input data of the NN must be normalised (using theoretical minimum and maximum).
- *Diagnosis of the faults in the TEP*
  We have done the diagnosis of all the faults, i.e., IDV (1) to IDV (15) in TEP. Figure 9 shows the separation between the faults of TEP by DANNA. A network of three layers obtained the best results on the performed tests:
  input layer: contains 53 neurones that represent the process parameters
  output layer: contains 15 neurons that represent the process faults
  hidden layer: contains 34 neurones ((53 + 15)/2 = 34).

Table I represents a comparison between the diagnosis realised by DANNA and some other approaches that proposed for the diagnosis of the TEP faults. The Bayesian networks have been used in [6] for the faults classification, however the approach proposed in [7] is a supervised pattern classification method which uses one dimensional adaptive rank-order morphological filter.

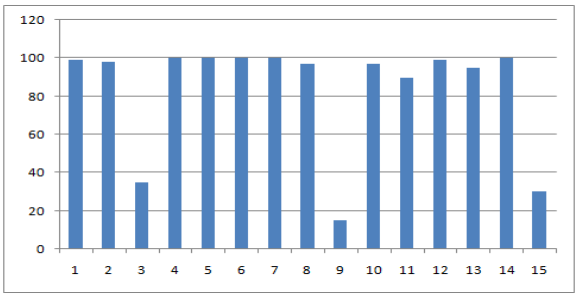

Fig. 2. Reliability of detection by MCCEA

TABLE I. CLASSIFICATION RATE OF THE KNOWN FAULTS IN TEP

Faults of TEP	***Classification rate***		
	DANNA	***Baysian net in [6]***	***PC1DARMF[7]***
IDV(1)	97.01%	97.5%	30%
IDV(2)	95.34%	98.125%	95%
IDV(3)	82.10%	22%	0.00%
IDV(4)	97.34%	82.375%	25%
IDV(5)	96.67%	98%	100%

IDV(6)	100%	100%	65%
IDV(7)	97.67%	100%	0.00%
IDV(8)	100%	97%	5%
IDV(9)	79.06%	22.625%	0.00%
IDV(10)	71.42%	86.875%	15%
IDV(11)	69.1%	75.5%	0.00%
IDV(12)	96.67%	98.25%	5%
IDV(13)	100%	76.125%	5%
IDV(14)	93.02%	98.75%	5%
IDV(15)	92.69%	23.5%	0.00%

V. CONCLUSION

In this paper we have proposed a new approach for multivariate process monitoring. The multivariate process monitoring is a complex procedure that is devised in four principal tasks: detection, diagnosis, identification and reconfiguration of the process. We use the multivariate control charts in the detection task. The diagnosis task is very complex especially in the process where the separation between the process faults is very difficult. We utilize the artificial neural network classifier (Multi layer Perceptron). To facilitate the use of the proposed approach with high efficiency, we integrate the different proposed sub-system (detection, diagnosis) in one system that is multi-agent system. The proposed model has been evaluated on a multivariate process (TEP: Tennessee Eastman Process). From the simulation results, we find that the proposed classifier gives a good result compared with some works applied on TEP.

In this work, we have seen that some faults are difficult for detecting, so our future works will concentrate on the development of the detection task. The developed reconfiguration agent realises the reconfiguration tasks for known faults, we concentrate also on the adding the reconfiguration in case when new fault appeared in the process.

ACKNOWLEDGMENT

The authors wish to thank the anonymous reviewers for their helpful comments and valuable suggestions that improved the quality of this paper.

REFERENCES

[1] V. Venkatasubramanian, R. Rengaswamy, K. Yin and S. Kavuri, “A review of process fault detection and diagnosis, part I: quantitative model-based methods’, Computers and Chemical Engineering, vol. 27, pp.293–311, 2003.

[2] P. Xia, “Horizontal cumulative variance chart: a quality control scheme monitoring shifts in process variation”, International Journal of Industrial and Systems Engineering, (in press)

[3] L.Yu-Chang, C. Chao-Yu and C. Chung-Ho, “Robustness of the EWMA median control chart to non-normality”, International Journal of Industrial and Systems Engineering, (in press).

[4] J.J. Downs and E.F. Vogel , “A plant-wide industrial process control problem”, Computers and Chemical Engineering, vol. 17, pp.245–255, (1993).

[5] I. Kononenko, “Semi-naive Bayesian classifier”, Proceedings of the European Working Session on Learning on Machine Learning, pp.206–219, (1991).

[6] V. Sylvain, “Diagnostic et surveillance des processus complexes par réseaux bayésiens ”, Thèse de doctorat, université d’ Angers, France, (2007).

[7] H. Li and D. Xiao “Fault diagnosis of Tennessee Eastman process using signal geometry matching technique”, Journal on Advances in Signal Processing, vol. 83, doi: 10.1186/1687-6180-2011-83. (2011).

BIOGRAPHY

Nafissa Rezki received her Master degree from the Computer Science Department, Biskra University, Algeria, in 2010. She is currently a PhD student in the Industrial Engineering Department, Batna University, Algeria. Her current research interests include manufacturing system, artificial intelligence, industrial maintenance, and quality control.

Leila Hayet Mouss received the BSc degree in Electrical Engineering, in 1979, from the National Polytechnic School of Algiers, Algeria; the MSc degree in Electrical and Computer Engineering, in 1982, from the ENSERB, France; and finally the PhD degree also in Electrical and Computer Engineering, in 1985, Bordeaux University, French. After graduation, she joined the University of Batna, Algeria, where she is an Associate Professor of Electrical and Computer Engineering. She is a member of New York Science Academy. She is the Head of Automatic and Computer Integrated Manufacturing Laboratory.

Her current research interests include industrial diagnosis of production system using the artificial intelligence techniques in the Laboratoire d'Automatique et Productique (LAP) Lab at Batna, Algeria.

Djamil Rezki obtained his Engineering degree in Computer Science from the University of Constantine, Algeria. He prepares his Magister thesis in Industrial Engineering Department, University of Batna, Algeria. He is interested in software engineering, artificial intelligence and manufacturing system.

Okba Kazar obtained his Magister degree by 1997 from Constantine University (Algeria). He obtained his PhD degree from the same university by 2005. He is member of editorial board of some international journal and author of some publication in international journals. Okba participates as a member of program committee in international conferences. He is interested and working in artificial intelligence field and multi-agents systems with their applications and also advanced information systems, web services, semantic web. He actually is a Full Professor at Computer Science Department of Biskra University.

Laid Kahloul obtained his PhD in 2012. He is a teacher and researcher in the Computer Science Department, Biskra University. He is interested in software engineering, formal methods, artificial intelligence, and creative learning techniques.